Large momentum acceptance gantry for CNAO

Dr. Dejan Trbojevic
Brookhaven National Laboratory

The CNAO 90° magnet during installation in the vertical line. The size is the same as for a gantry final magnet.

Mobile isocenter - 2

Patient positioned
in a small room "somewhere"

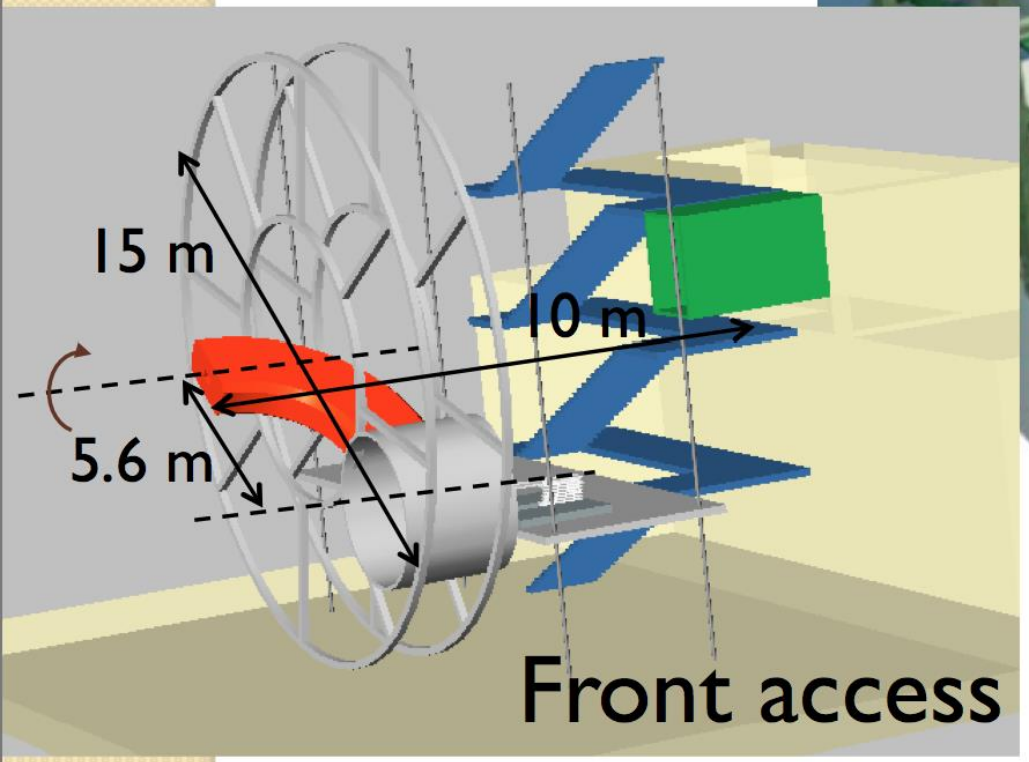

Gantry is longer, than just the last magnet but at small *r*

ULICE gantry

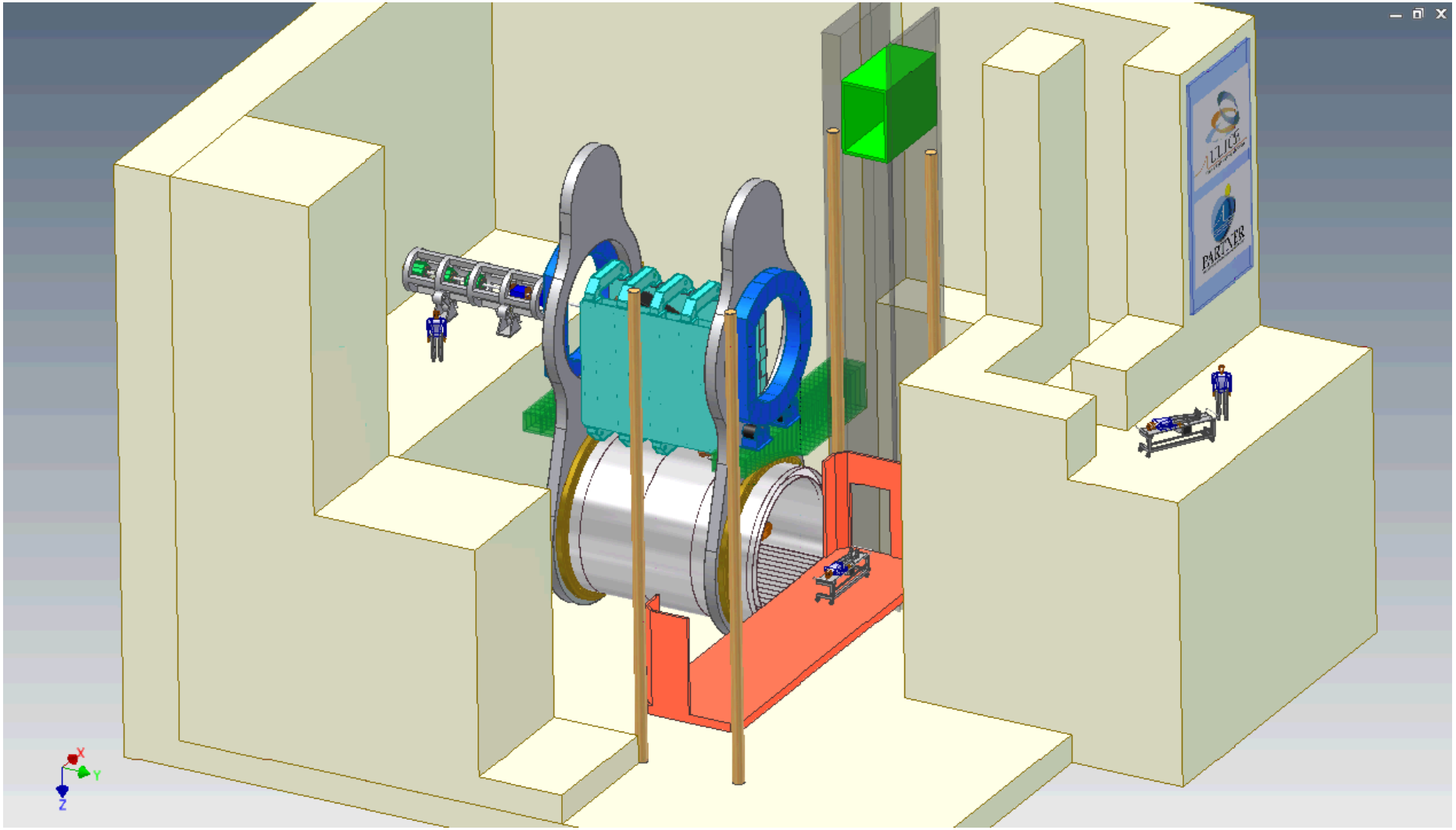

Gantry room

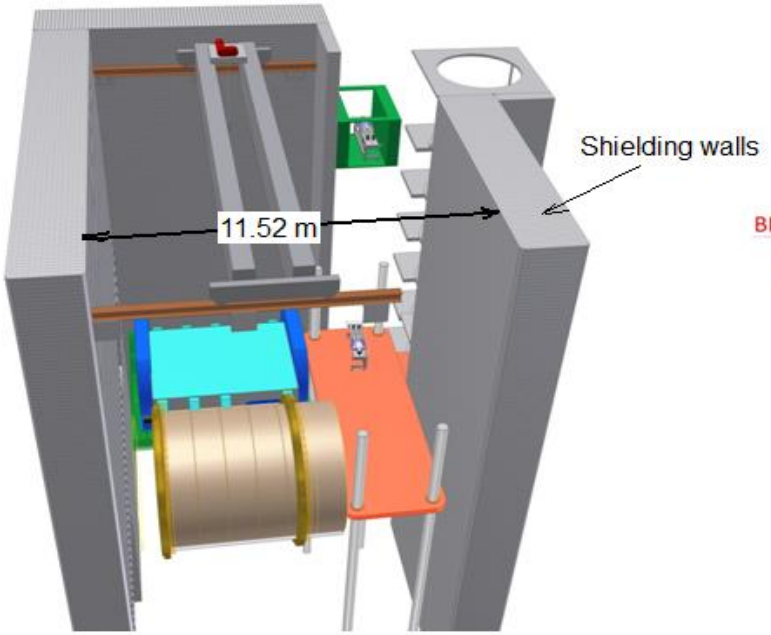
Shielding walls
11.52 m

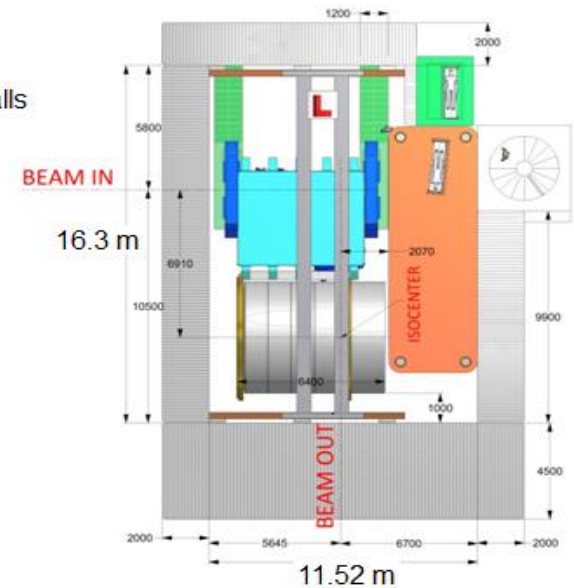
BEAM IN
16.3 m
ISOCENTER
BEAM OUT
11.52 m

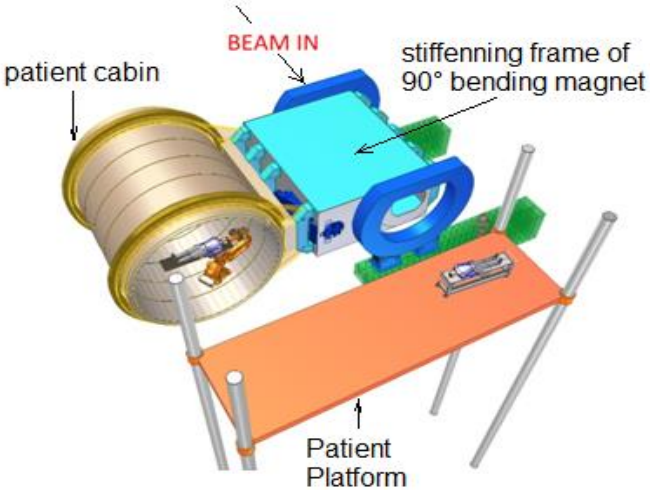
patient cabin
BEAM IN
stiffenning frame of
90° bending magnet
Patient
Platform

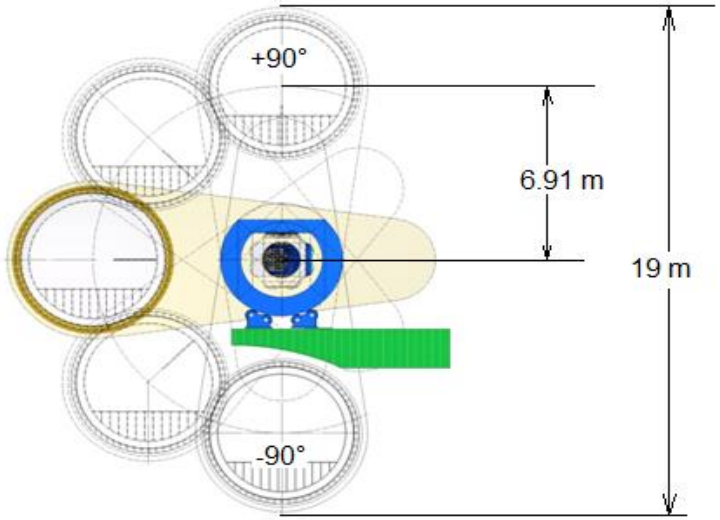
+90°
6.91 m
19 m
-90°

Gantry room

Even shorter and save one shelf/support

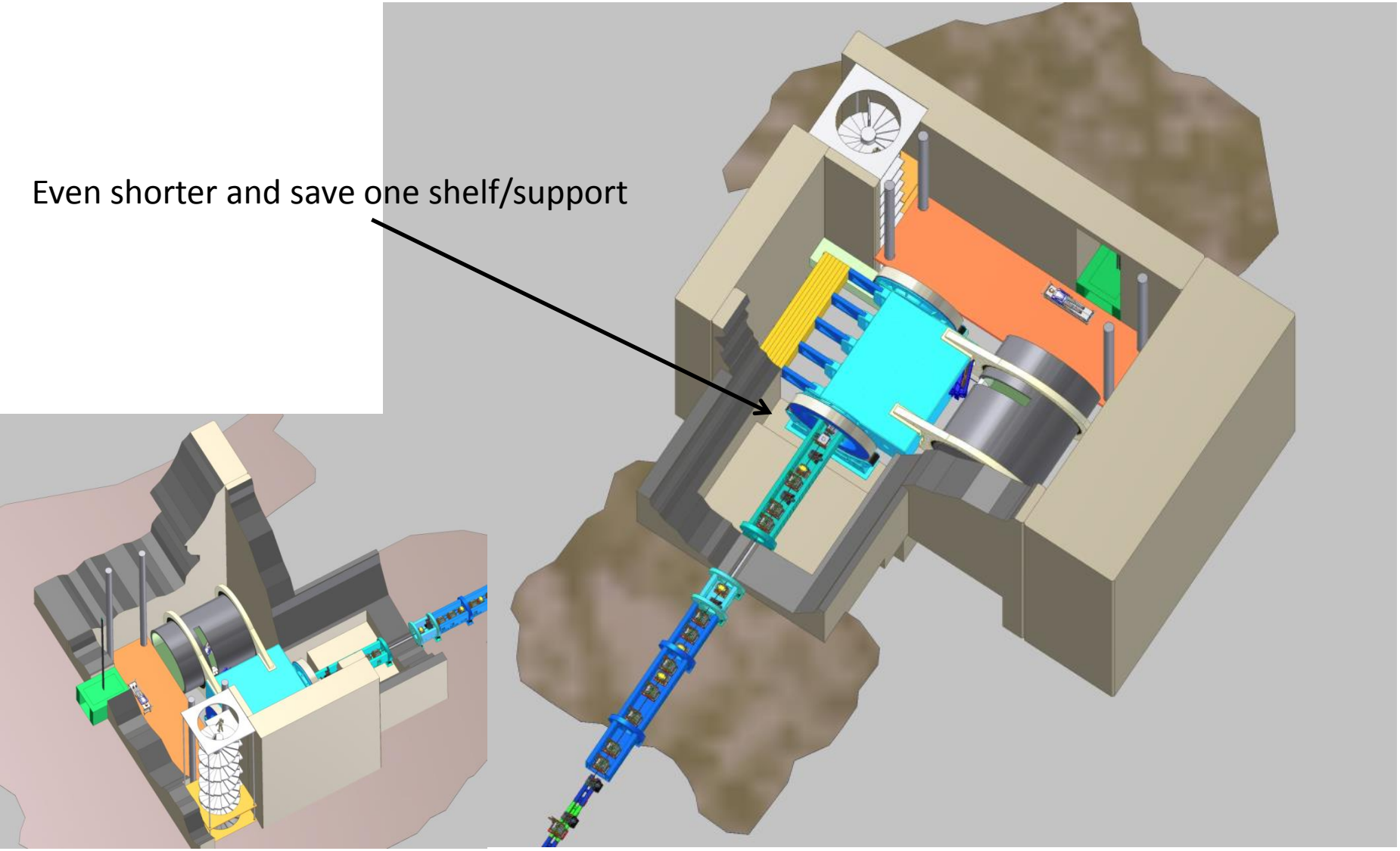

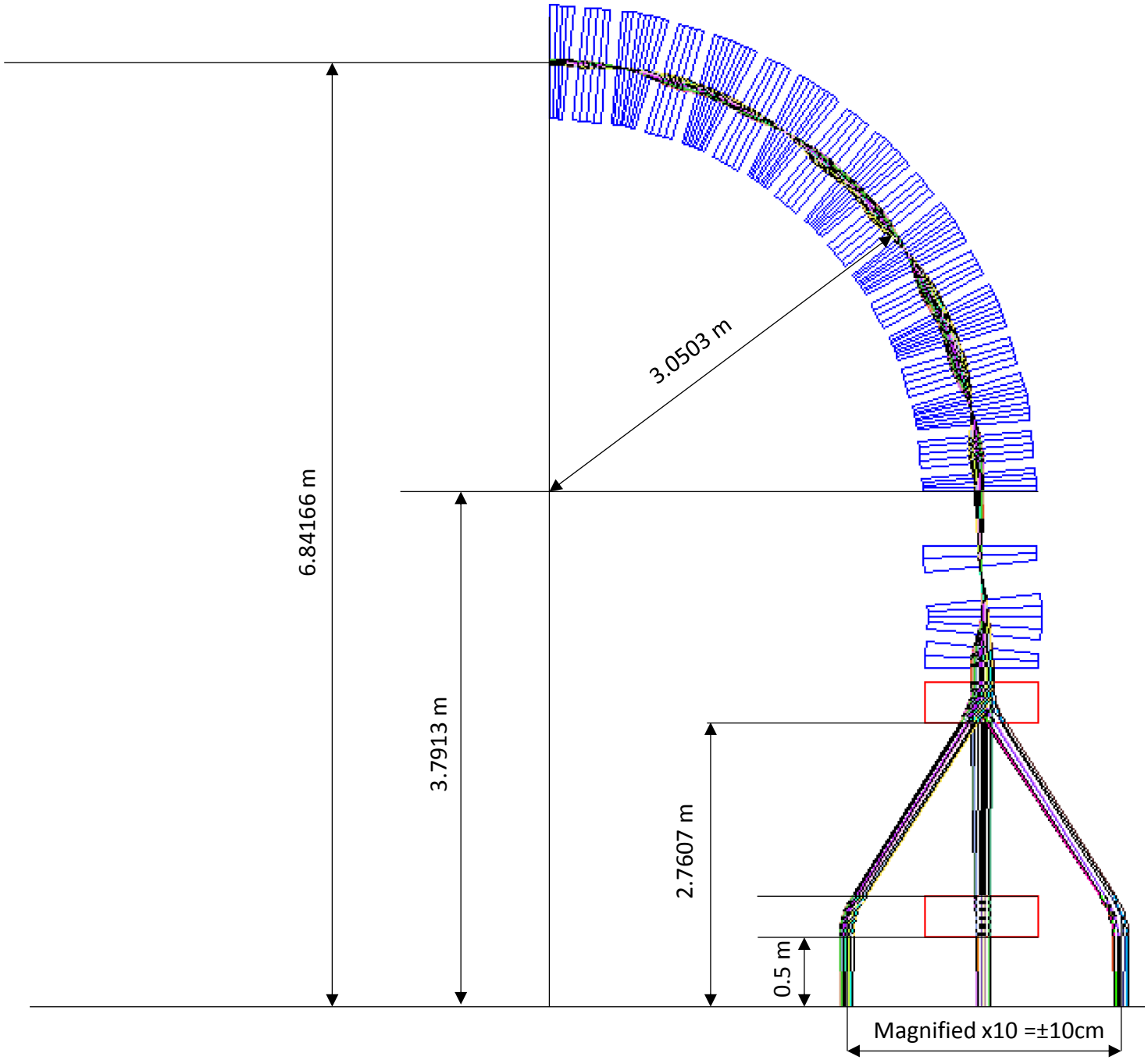
3.0503 m
6.84166 m
3.7913 m
2.7607 m
0.5 m
Magnified x10 =±10cm

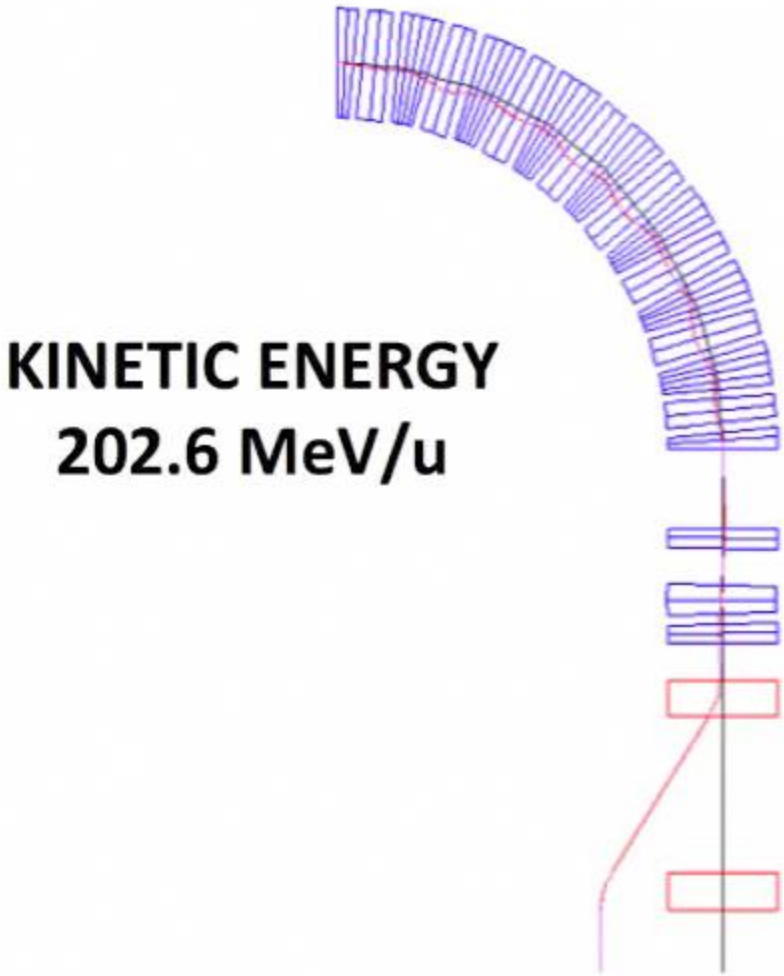
KINETIC ENERGY
202.6 MeV/u

Beam line

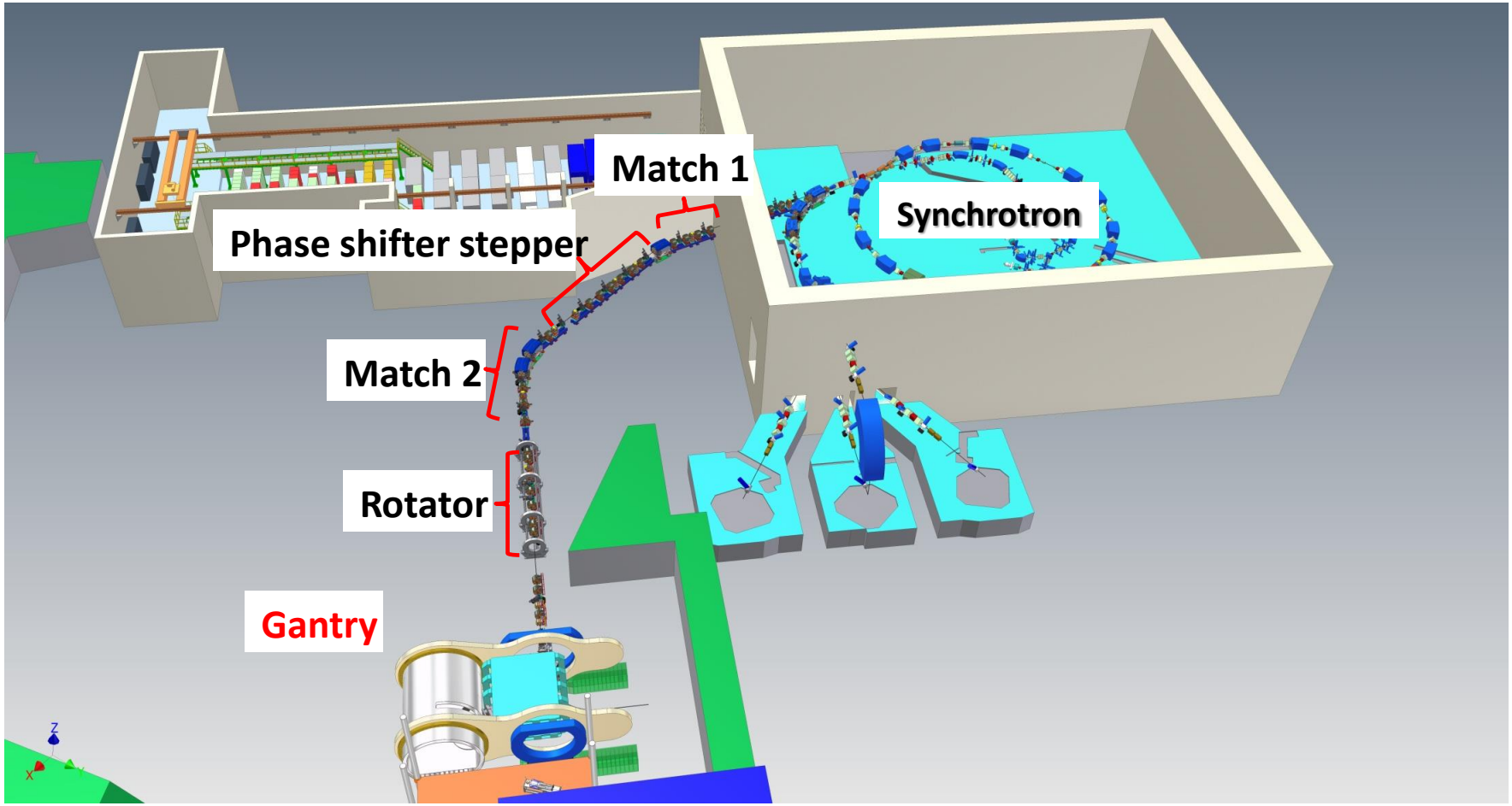

Synchrotron
- particle Beam source
- Initial beam conditions

→

Match
- Adjust the beam parameters to the following elemets

→

Phase shifter stepper
- Adjust the beam dimensions at the isocenter

→

Telescope
- Final Match
- Rotator
- Gantry

- In the mobile isocenter gantry the rotator must be placed between a “first” fixed dipole to launch the dispersion and the gantry.
- With a closed dispersion gantry the rotator can be positioned upstream the “first” dipole (which then turns into an achromat).
- Thus, one rotator, many gantries!
- Longer/Narrower footprint

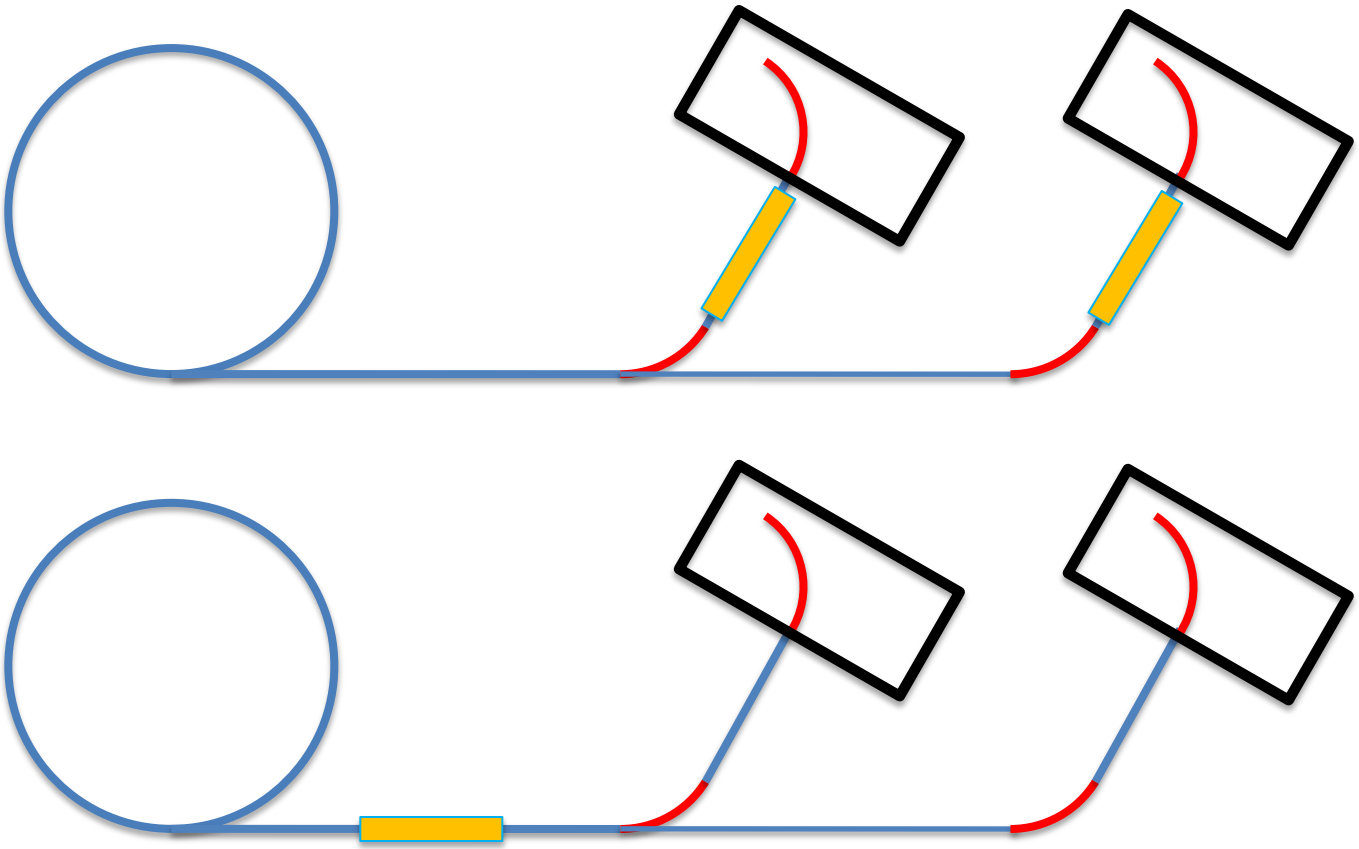

The ULICE gantry: Beam Based Alignment

Isocenter position moves and is not easy to measure/verify/define

CNAO treatment room #2: PPS and PVS

Measure where the beam is and put the isocenter there…

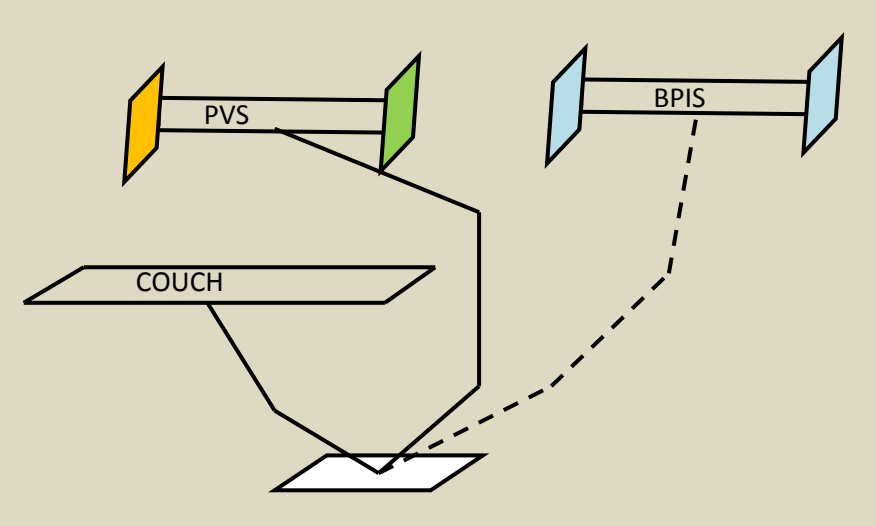

One robot arm with two “tools”

Thank you for your attention