Train Builder
Overview and data structure

Bruno Fernandes – European XFEL Facility

This project has received funding from the *European Union's Horizon 2020 research and innovation programme* under grant agreement No 654220

Principle function

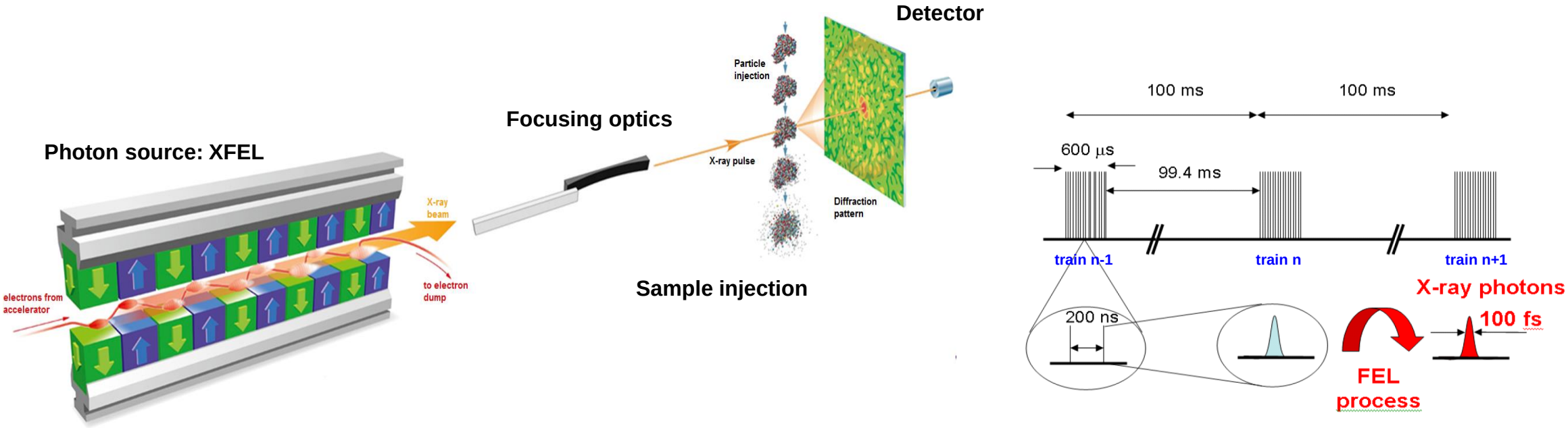

- The European XFEL generates up to 2700 X-Ray pulses
  - Inter pulse separation of 220 ns
  - Train repetition of 10 Hz

This project has received funding from the *European Union's Horizon 2020 research and innovation programme* under grant agreement No 654220

1 Megapixel detectors available

- AGIPD – Adaptive Gain Integrating Pixel detector

352 Images per train

- LPD – Large Pixel Detector

512 Images per train

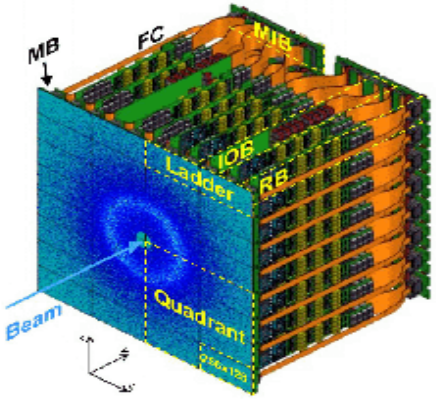

- DSSC – DEPFET Sensor with Signal Compression

510 Images per train

Amount of Data

Per train (10Hz) LPD produces 1024 MB of Data

This project has received funding from the *European Union's Horizon 2020 research and innovation programme* under grant agreement No 654220

Train Builder

- Advanced Telecom ATCA based custom data acquisition system designed to provide a **common readout system** for the large 2D Mega-pixel detectors
  - Development done by Rutherford Appleton Lab (STFC)
- Four dual 10 Gbps 10SPF+, each connected to a Xilinx Virtex5 via 8 MGT lanes
  - Each FPGA is connected to a dual 2Gbytes DDR2, managed by a PowerPC440 embedded processor
  - MGT operate at 3.125 Gbps
- A central analogue **Crosspoint switch** communicates with all FPGA and to the ATCA Zone 3 – can run up to 2.5 Gbps
- **Merge detector link image fragments in each pulse train** and send the complete detector “movies” of images to a PCs farm
  - Also do some processing on Train Data (VETO, pixel reordering, etc..)

This project has received funding from the *European Union’s Horizon 2020 research and innovation programme* under grant agreement No 654220

Train Builder (detail)

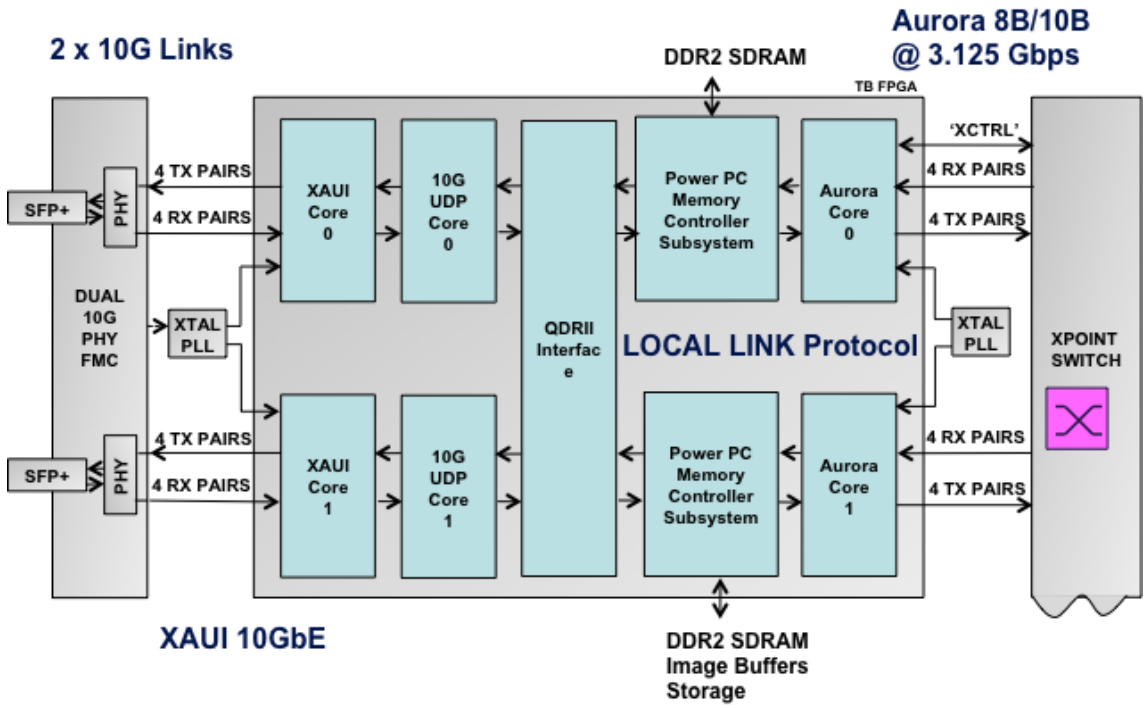

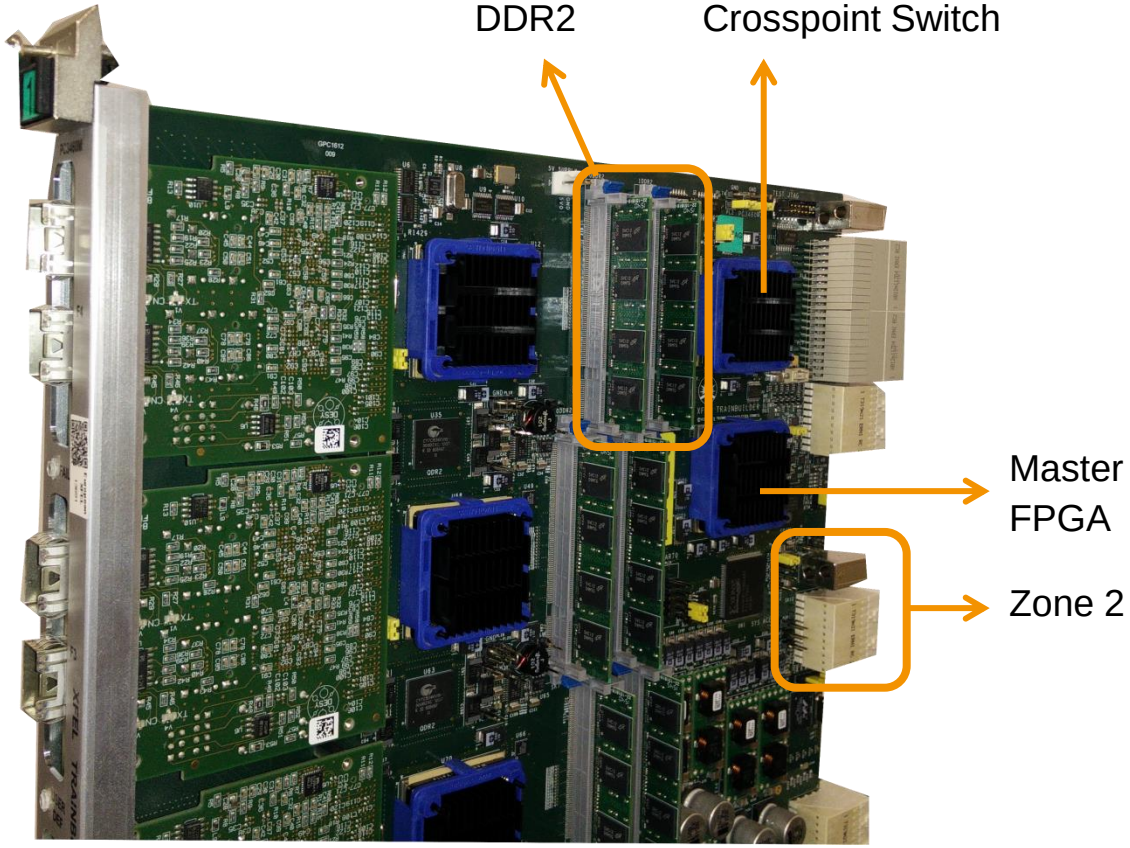

This project has received funding from the *European Union's Horizon 2020 research and innovation programme* under grant agreement No 654220

Detector architecture

General architecture of a 2D pixel detector in XFEL:

- Top layer contains FEE of the detector
- XFEL C&C distributes master clock of 99 MHz, Command and VETO signals
- **Partial** generated images are generated and sent via 10 Gbps SFP+ optical links via UDP/IP protocol
  - A total of **16 links** is require to readout 1 Megapixel
- Train Builder reshuffles the data so it is presented in the proper order
  - This includes **pixel reordering**
- Data transmitted to PC layers via 10Gbps fiber links

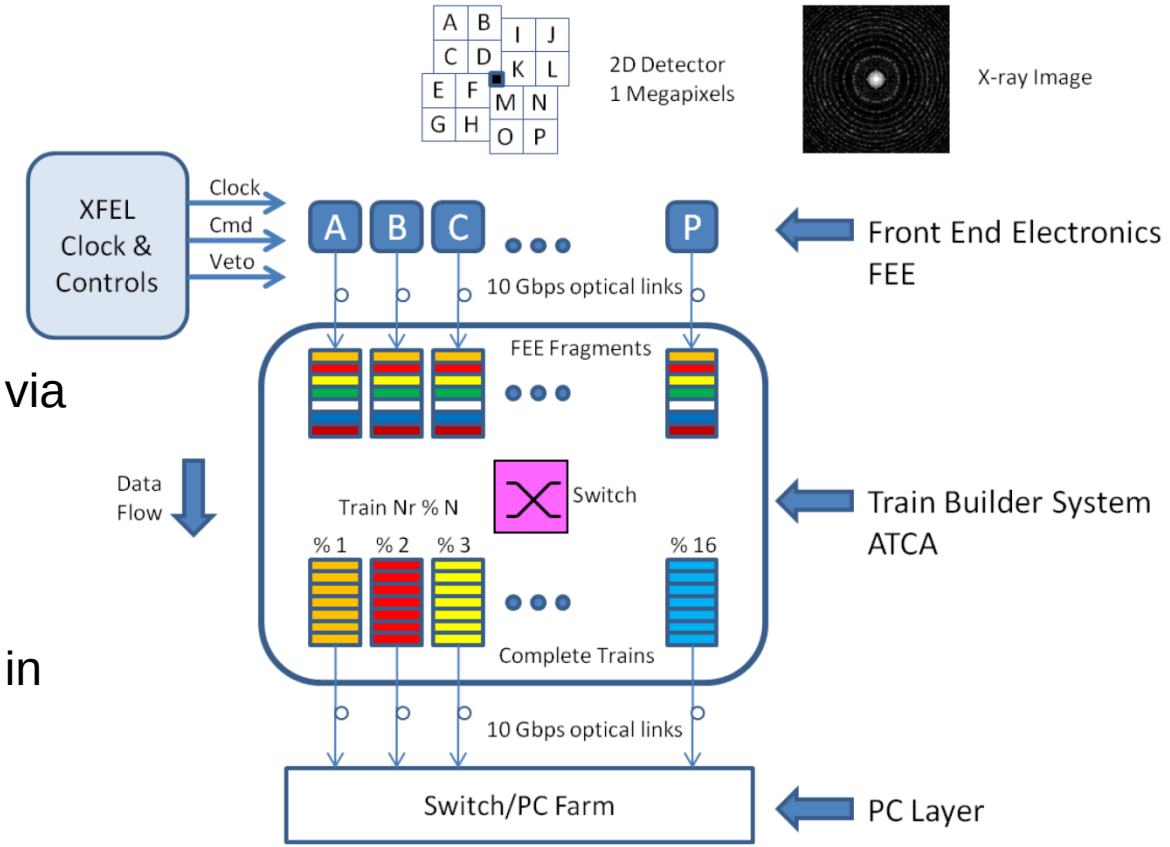

This project has received funding from the *European Union's Horizon 2020 research and innovation programme* under grant agreement No 654220

Train Data transmission (1/4 Megapixel)

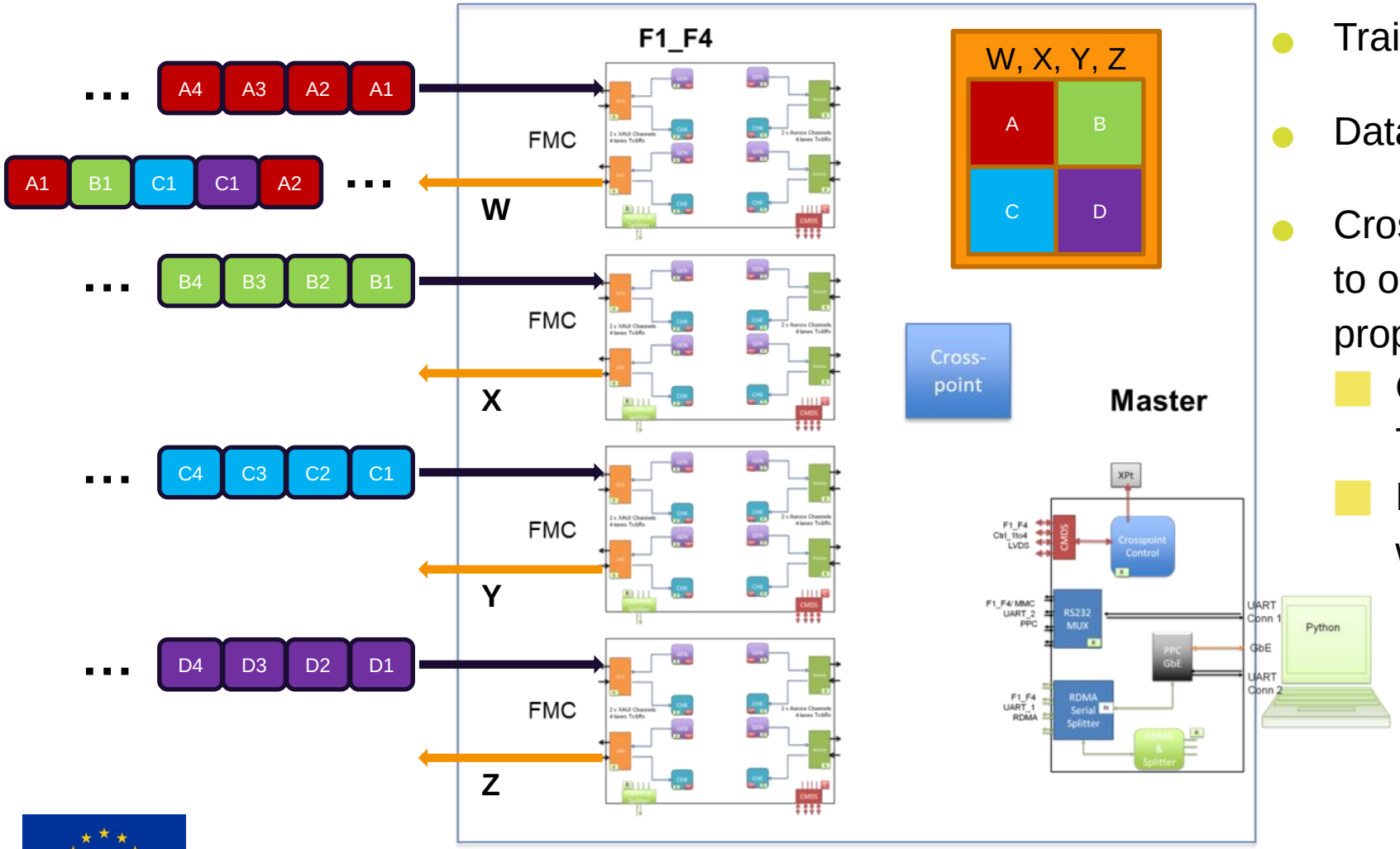

- Train data arrives from all 4 channels
- Data gets stores in DDR memories
- Crosspoint point forwards all the data to one FPGA to be readout in the proper order
  - Output channels rotates in each Train
  - Master FPGA controls the workflow

This project has received funding from the *European Union's Horizon 2020 research and innovation programme* under grant agreement No 654220

Train Data transmission (1 Megapixel)

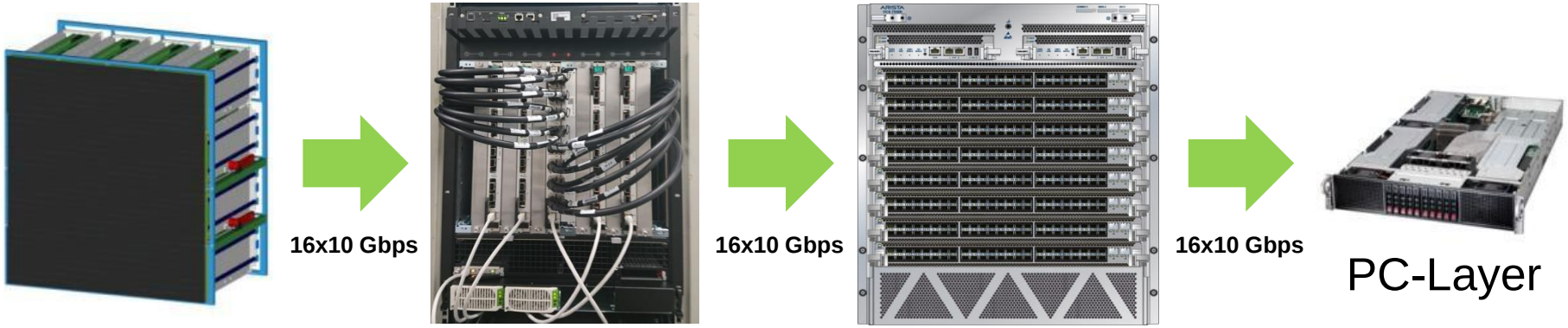

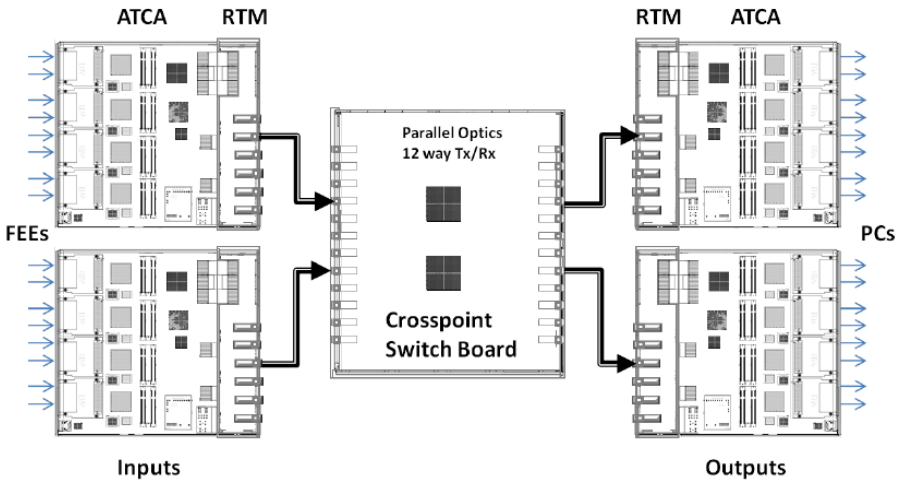

- 4 Train Builders are used for collecting the data for a Megapixel detector
- Boards can communicate with each other via a Crosspoint Switch board

This project has received funding from the *European Union's Horizon 2020 research and innovation programme* under grant agreement No 654220

Data protocol and format

Data transfer protocol and format:

- **Train Transfer Protocol** (TTP) based on UDP and used for exchanging data between 2D detectors and train builder and further down between train builder and the PC layer
  - TTP is **agnostic to the carried data content**
- **XFEL Train Data Format** (XTDF) used to structure data generated by detectors.
  - XTDF describes **how the data is structured** within a single train

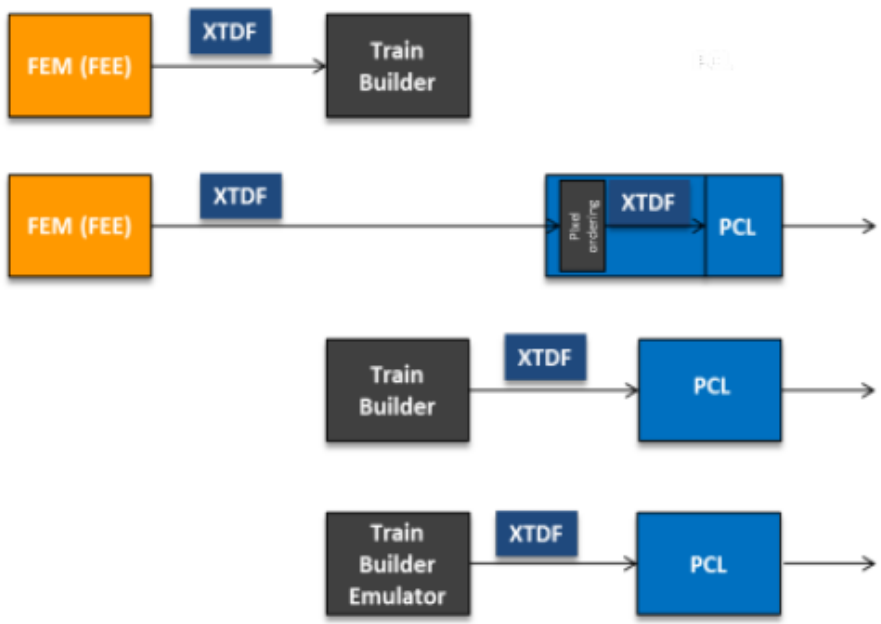

This project has received funding from the *European Union's Horizon 2020 research and innovation programme* under grant agreement No 654220

XFEL Train Data Format (XTDF)

Certain parameters need to be configure to properly interpret Train Data - number of pixels per direction, modules in a detector, encoding of images.

This information together with information within the Header allows to calculate **the data block size**

- Data block size depends on source of Data (detectors or Train Builder)

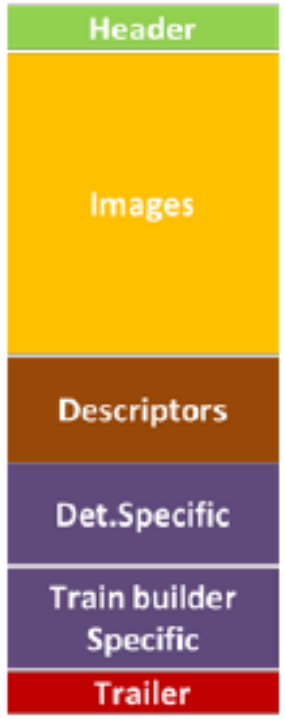

- **Header** - describes the properties of the entire train
  - Train ID, number or pulses, module Width x Height, enconding
- **Images** - images which belongs to the train
- **Descriptors** - properties of individual images
  - Images meta data (pulse ID, length, cell ID..)
- **Detector specific** - information used for debugging (opt)
- **Train Builder specific** - information used for debugging (opt)
- **Trailer** - properties of the entire train

This project has received funding from the *European Union's Horizon 2020 research and innovation programme* under grant agreement No 654220

Train Transfer Protocol (TTP)

- In order to transfer a data block between two network end-points, the block is divided into **small chunks**, each of which is held in a separate UDP packet
  - Besides payload (data), each packet holds a unique sequence number that define its order in the data stream
- A packet must be a multiple of 8 bytes and all packets should have the same size, except the last one that could be smaller
  - In such case, the payload is padded out as required with “zeros” in order to reach the minimum packets size set by the 10G IP core

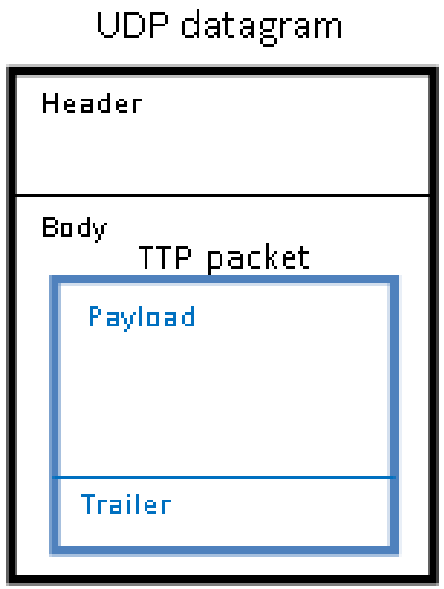

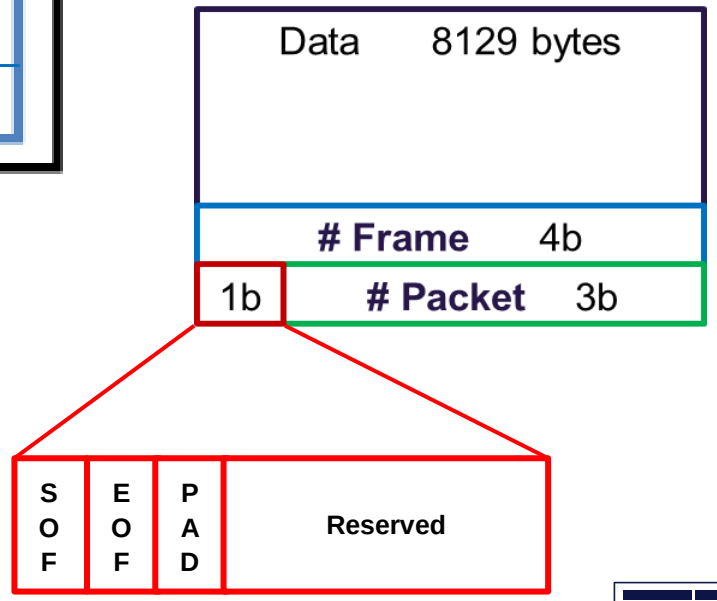

This project has received funding from the *European Union’s Horizon 2020 research and innovation programme* under grant agreement No 654220

Transfer operation

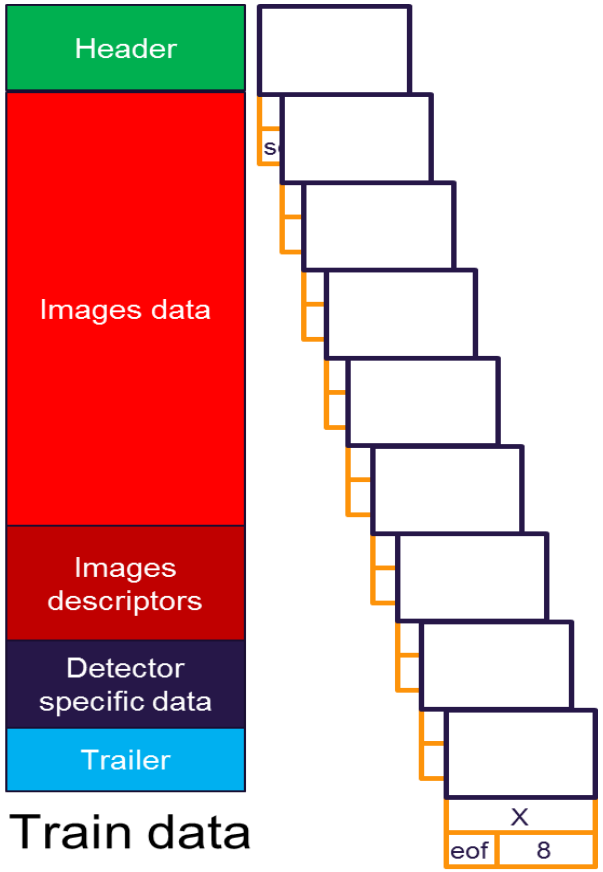

- Transferring a data block from one end-point to another one starts first by dividing the whole data block into **small chunks**
- Data chunk along with its trailer form a TTP packet. Packets are sent out using UDP datagrams.

This project has received funding from the *European Union's Horizon 2020 research and innovation programme* under grant agreement No 654220

Data transfer

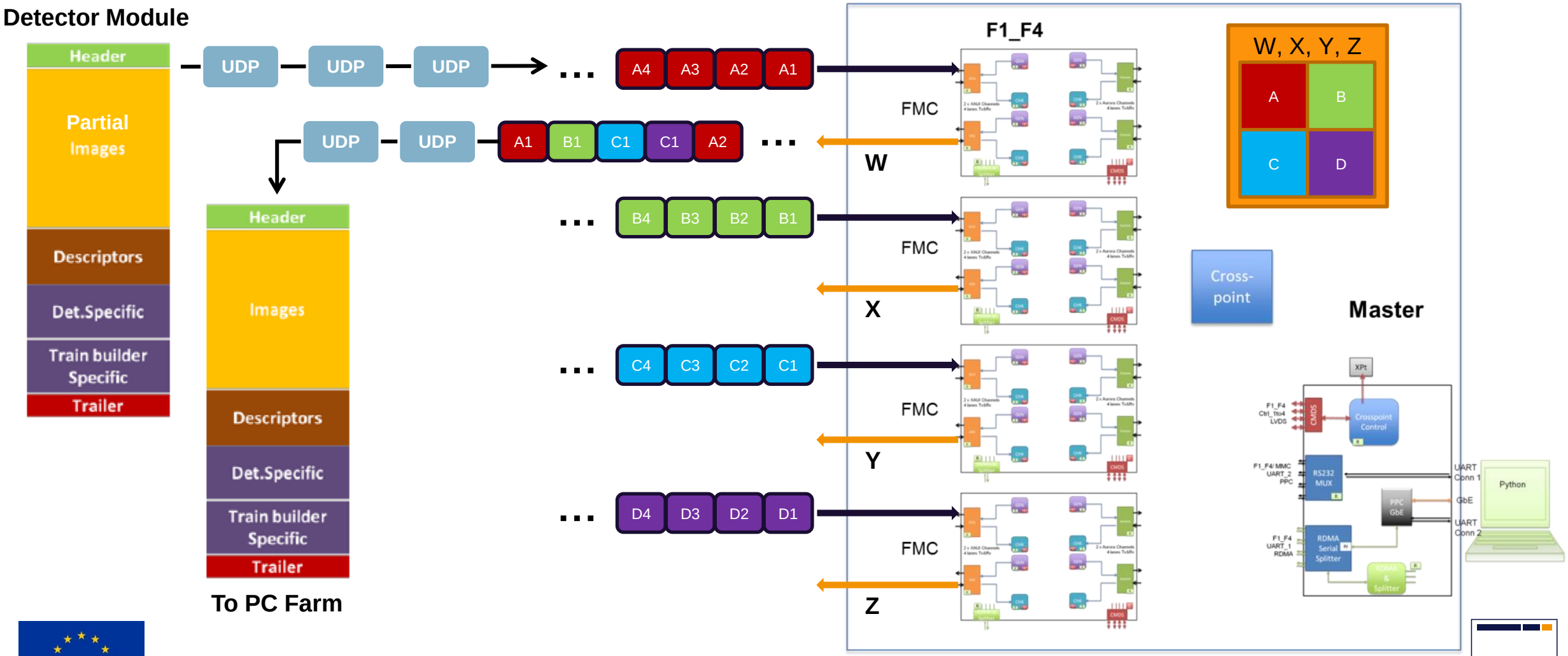

This project has received funding from the *European Union's Horizon 2020 research and innovation programme* under grant agreement No 654220

Future plans

- Current DSSC system supports 510 images per train. It can generate maximum up to **800 images** per train.
- In some configuration AGIPD generates **4 Bytes per Pixel** which doubles the data rate.
- **4 Mega Pixel AGIPD** is also planned to be used at XFEL.

This project has received funding from the *European Union's Horizon 2020 research and innovation programme* under grant agreement No 654220

Maxeler Platform

- High level FPGA development, based on Dataflows engines
- “A dataflow application consists of CPU code (describe in C) and large amount of data running in dataflow engines.”
- Boards interfaces are taken care by the IDE

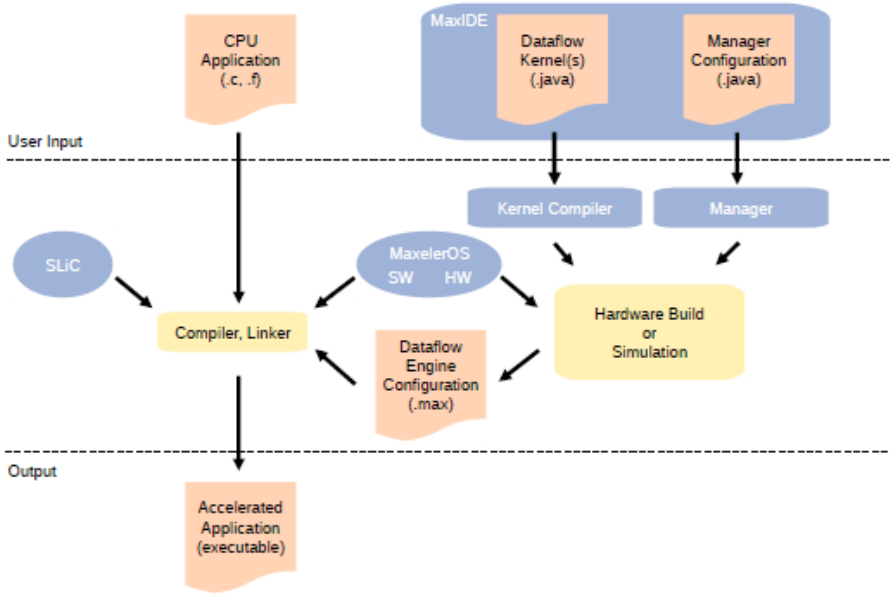


```
class MovingAverageSimpleKernel extends Kernel {

    MovingAverageSimpleKernel(KernelParameters parameters) {
        super(parameters);

        DFEVar x = io.input("x", dfeFloat(8, 24));

        DFEVar prev = stream.offset(x, −1);
        DFEVar next = stream.offset(x, 1);
        DFEVar sum = prev + x + next;
        DFEVar result = sum / 3;

        io.output("y", result, dfeFloat(8, 24));
    }
}
```

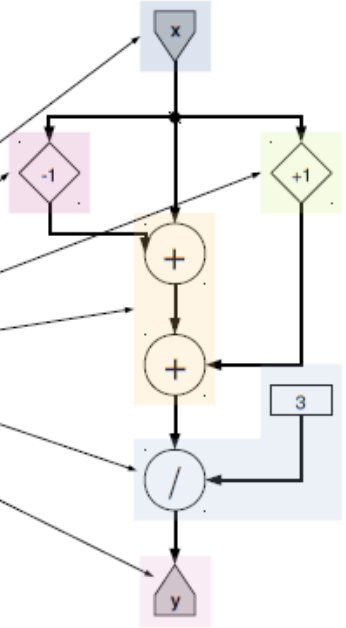

This project has received funding from the *European Union’s Horizon 2020 research and innovation programme* under grant agreement No 654220

Juniper Maxeler

- Maxeler Juniper QFX5100 with QFX-PFA-4Q
  - 24 x QSFP+ ports
  - Available IPs
    - ► 10G/40G Ethernet MAC
    - ► Hardware TCP Stack with support for up to 16K Connections
    - ► UDP/IP
- First tests already perform
  - Unpacking of XTDF packets
  - Reordering of pixels

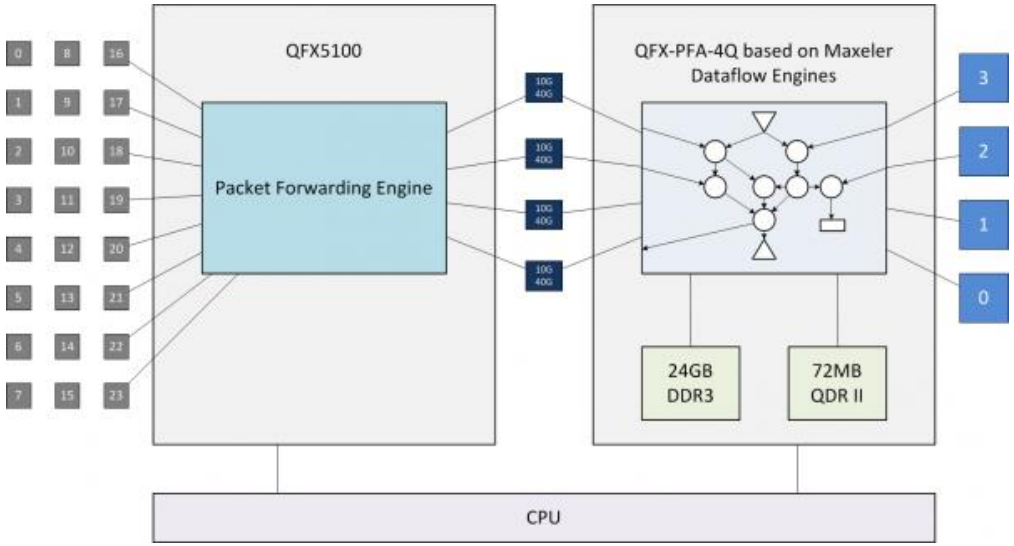

This project has received funding from the *European Union's Horizon 2020 research and innovation programme* under grant agreement No 654220

- Thanks you for your attention. Questions?

bruno.fernandes@xfel.eu

This project has received funding from the *European Union's Horizon 2020 research and innovation programme* under grant agreement No 654220

Extra Slides – ¼ Megapixel reordering

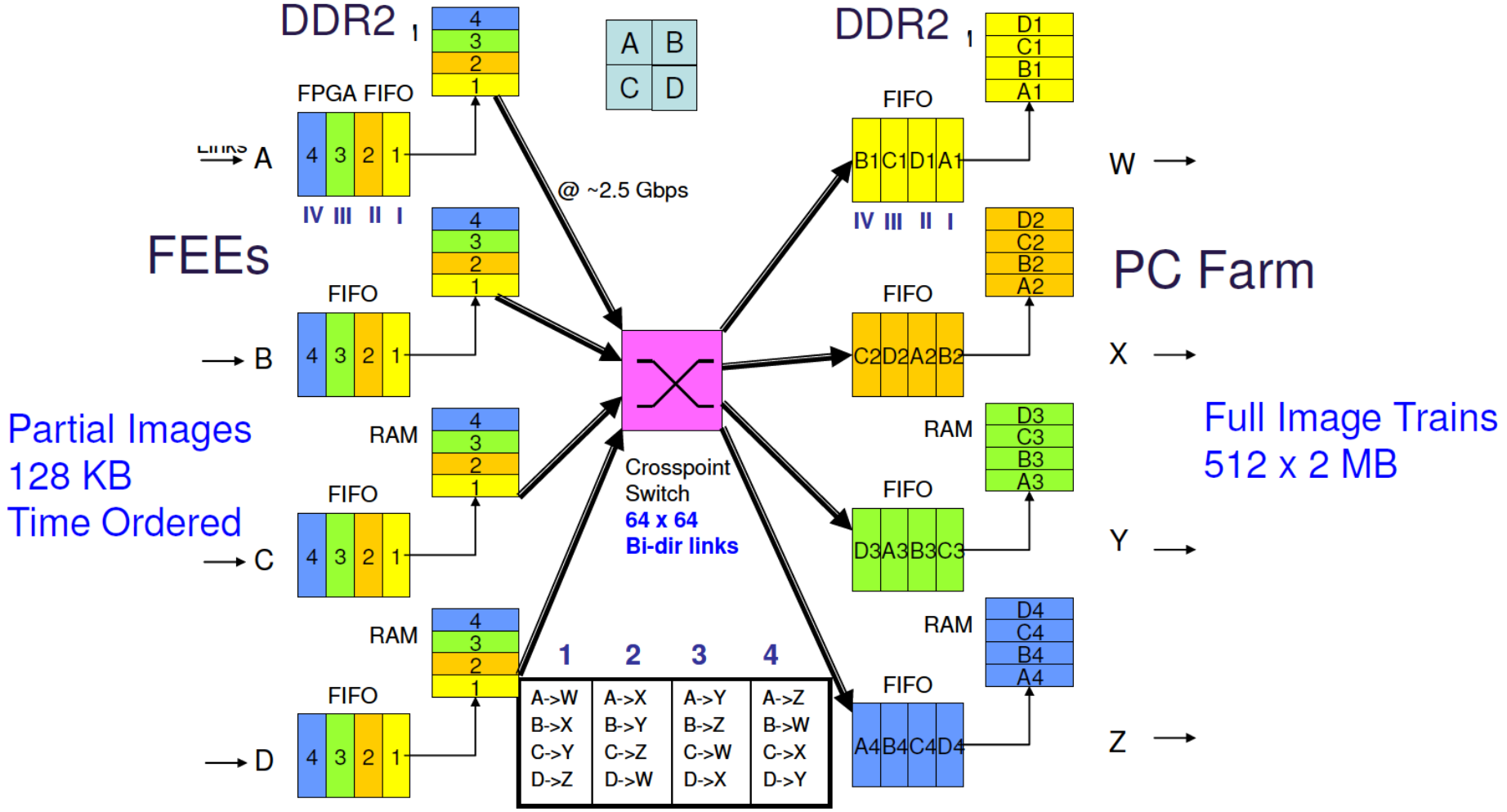

This project has received funding from the *European Union's Horizon 2020 research and innovation programme* under grant agreement No 654220

Extra slide – Size packets

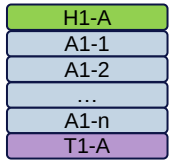

Input Format:

Size of H1-A=64Bytes

Size of A1-1=128KB

Size of T1-A=13632Bytes

800 images per train:

Size of A1=128KBx800=100MB

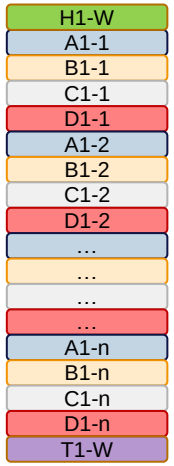

¼ Megapixel Output Format:

Size of H1-W=64Bytes

Size of A1-1=128KB

Size of A1-1+B1-1+C1-1+D1-1=512KB

Size of T1-A=54528Bytes

800 images per train:

Size of train data=512KBx800=400MB

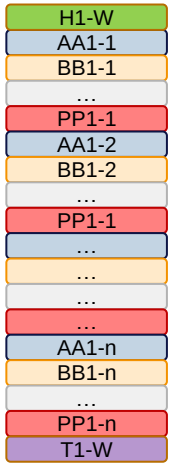

1 Megapixel Output Format:

Size of H1-W=64Bytes

Size of AA1-1=128KB

Size of AA1-1+BB1-1+…+PP1-1=2MB

Size of T1-A=218112Bytes

800 images per train:

Size of train data=2MBx800=1600MB

This project has received funding from the *European Union's Horizon 2020 research and innovation programme* under grant agreement No 654220