PAUL SCHERRER INSTITUT

Swiss Accelerator Research and Technology

B. Auchmann (CERN/PSI) on behalf of the MagDev team and all our collaborators
CHART2/MagDev Results and Roadmap - Technical Review, December 14, 2021

Summary MagDev2 Roadmap

Work supported by the Swiss State Secretariat for Education, Research and Innovation SERI.

Overview

- Final remarks on CCT
- LTS Roadmap Thoughts and Conclusions
- MagDev1 Status and MagDev2 Project Plan
- A word on MagNum
- Conculsions

Overview

- Final remarks on CCT
- LTS Roadmap Thoughts and Conclusions
- MagDev1 Status and MagDev2 Project Plan
- A word on MagNum
- Conculsions

CCT for FCC-hh Pros and Cons

- Design:
  - ***Mechanical support*** of each turn
    → reduced coil stress and avoidance of stress-induced degradation.
  - Presumably, ***no need for axial support***.
  - Easy field quality (on paper).
  - Ideally suited for LTS/HTS ***hybrid magnets*** due to easy stacking of heterogeneous layers.
  - (May still prove convenient for curved magnets.)
  - Simpler external mechanical structure → more iron between the apertures and better magnetic separation → less cross-talk.
  - ***Hope to fix training***: getting one turn "right", the entire magnet would work; no discontinuities towards the end regions
- Fabrication:
  - Simple and safe coil-manufacturing process; ***little tooling*** needed; coil always protected by former.
- Instrumentation and protection:
  - Efficient CLIQ protection as every turn is a high-field turn.
  - Co-winding of instrumentation (fibers, wires, etc.) is supposedly easy.

- Design:
  - (If every turn must be glued to metal surfaces, delamination would preclude good performance.)
  - Reduced efficiency by winding angle, rib thickness, and spar thickness.
  - Check FQ variation along z-axis due to ***lack of control on turn position***.
  - Some axial strain on cable in every turn.
  - No radial pre-compression possible.
- ***Fabrication***:
  - Reliable ***winding*** on small ID with wide cable.
  - Difficult to obtain reliable insulation.
  - Difficult to ***keep cable in groove*** on small IDs.
  - Interplay between former and cable during reaction.
- Instrumentation and protection
  - No heater protection possible.
- ***Scale-up***:
  - Involved ***former manufacturing***; cost and time consuming; difficult to scale to 15 m.
  - Difficult ***assembly*** for long magnets – assembly gaps reduce performance.

CCT Conclusions

- Fundamental obstacles remain for an application in FCC-hh.
  - Layer-in-layer ***assembly*** on 15 m length with minimal assembly space.
  - ***Windability*** with big cables on small diameters.
  - ***Cable positioning*** radial and axial in grooves during heat treatment.
  - ***Former manufacturing*** and assembly.
- Continued interest in CCT for remains in the areas of:
  - ***Short (up to 2 m), no-heat-treatment*** accelerator magnets.
    - Nb-Ti magnets should be able to operate stably at much smaller margins than the HiLumi correctors (8-9 T target).
  - ***Nb3Sn background-field magnets.***
    - Large bore, straight, limited in length, somewhat more flexible in field quality, reduced development time balances cost for reduced efficiency.
  - Possibly ***curved magnets***.
- ***We recommend wax or a similar*** material for impregnation:
  - Layer-by-layer impregnation in a vacuum bag, as done by LBNL, ideally in an autoclave.
  - Assembly via assembly-impregnation step or with custom shims as LBNL.

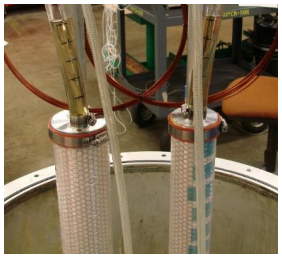

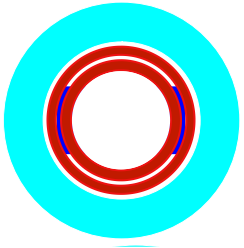

LBNL Subscale CCT manufacturing; Courtesy of D. Arbelaez LBL.

Overview

- Final remarks on CCT
- LTS Roadmap Thoughts and Conclusions
- MagDev1 Status and MagDev2 Project Plan
- A word on MagNum
- Conculsions

LPCT and SMCT

- At the beginning of MagDev1, the bonding and cracking problem in CCT was deemed potentially fatal for CCT and SMCT.
  - BOX was devised to probe this hypothesis and possibly find a solution.
- Simultaneously, work on LPCT started as a potential alternative.
  - The LPCT study has given a number of interesting answers and brought up new technological problems.
  - More design exploration and technology development/validation would be needed to envisage a conceptual design.
- With the results of Wax-BOX1 and 2, and the recent results of the transverse-pressure BOX with wax filler, SMCT has stepped forward as a serious contender.
  - For the near-term future (coming 5 years), we believe that the demonstration potential (in terms of performance, robustness, and even cost) is higher with SMCT.
  - Ideally, it combines the advantages of CCT in terms of stress management and ease of construction, with those of CT in terms of winding and assembly.
- This is what we would like to prove (or disprove) with MagDev2.

Additional thoughts on SMCT

We believe that we can take a crack most of the known issues in Nb3Sn technology in pragmatic, yet innovative ways:

- Cracking and de-bonding in CCT's SM concept:
  - Wax impregnation appears to solve this problem.
  - Optimization of materials that reproduce this no-quench behavior continue.
- Risk in assembly and pre-load operation:
  - SMCT is an intrinsically low- to no-prestress concept.
  - Different structures have been studied in a preliminary way.
  - Pres-stress after cool-down remains minimal.
  - Loading of the coil composite is uni-directional with minimal shear.
- Axial preload and influence of axial CTE mis-matches and sectioned/laminated components:
  - Back-bones can react a part of the axial pre-load.
  - An interior stainless-steel shell with possibly welded endplate reacts axial forces without interference of exterior interfaces.
  - Hypothesis: stress-management in the ends makes axial pre-load unnecessary.
  - (Could the interior shell be used to reduce He inventory in an FCC-hh?)

Additional thoughts on SMCT

Manufacturing processes with SMCT could be almost as simple as CCT:

- Backbone accompanies the coils through all steps.
  - Help aligning sectioned winding formers.
  - May be used for handling of coils.
  - Provides reference for metrology.
  - Can be used to ensure axial fix point throuh the layers, e.g., to protect a radial layer jump.
- Additive manufacturing of winding former is feasible (not so for CCT structure). CNC machining is equally more efficient.
- Coil winding into slots should be easier:
  - We take FNAL technician's word for it.
  - Clamping of turns is much easier and more reproducible when each block has an opposing surface to clamp against.
- Curing may not be needed – to be proven.

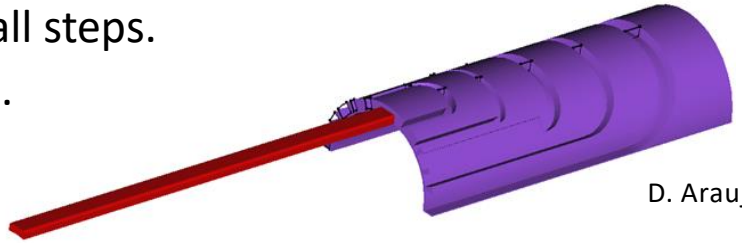

D. Araujo

Additional thoughts on SMCT

Manufacturing processes with SMCT could be almost as simple as CCT:

- Coils should be produced layer by layer.
  - Robust manufacturing (see below).
  - Shorter unit lengths (reduced risk and cost).
  - Full grading (small improvement in efficiency).
- Heat treatment mold may be wrap-around stainless-steel tape.
  - Clamp a half-cylinder dummy former opposite the coil and wrap the coils on the winding table.
  - Apply very low winding tension as to not deform the former.
- Impregnation could be done with vacuum bags and VPI:
  - Highest achievable reliability.
  - Filler needs to penetrate no more than 1.5 – 2 cm.
  - 10 bar applied directly on surface.

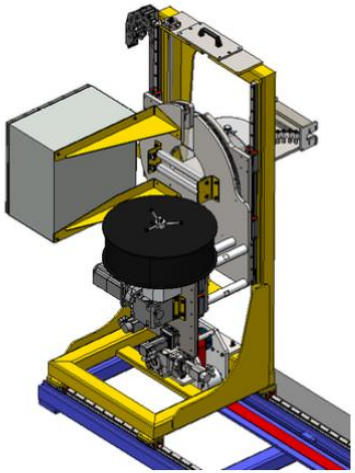

Ridgway Ltd

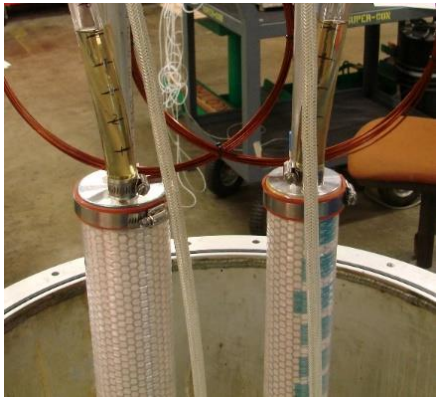

Vacuum bag impregnation of subscale CCT. Photo courtesy of D. Arbelaez LBL.

Additional thoughts on SMCT

Some special technologies are needed:

- Layer jumps – still in brainstorming phase:
  - Preferred solution: exit each layer axially on top of coil ends.

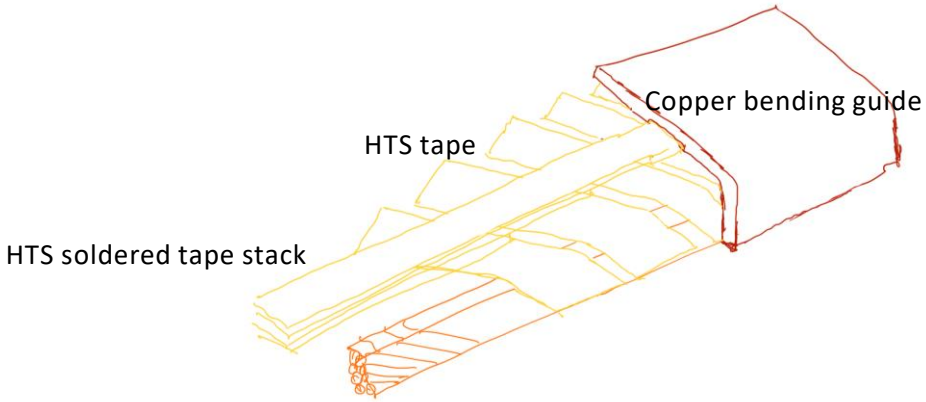

Courtesy D. Uglietti, EPFL-SPC

  - Advantages: short ULs, full grading, installation prior to impregnation, no radial connection subject to shear between layers, optimized layer connectivity for reduction of peak voltage to ground (layer 1-3-2-4).

Additional thoughts on SMCT

Some special technologies are needed:

- Layer jumps:
  - Plan-B: radial layer-jump to be installed after impregnation, during coil assembly.
  - MSUT-style

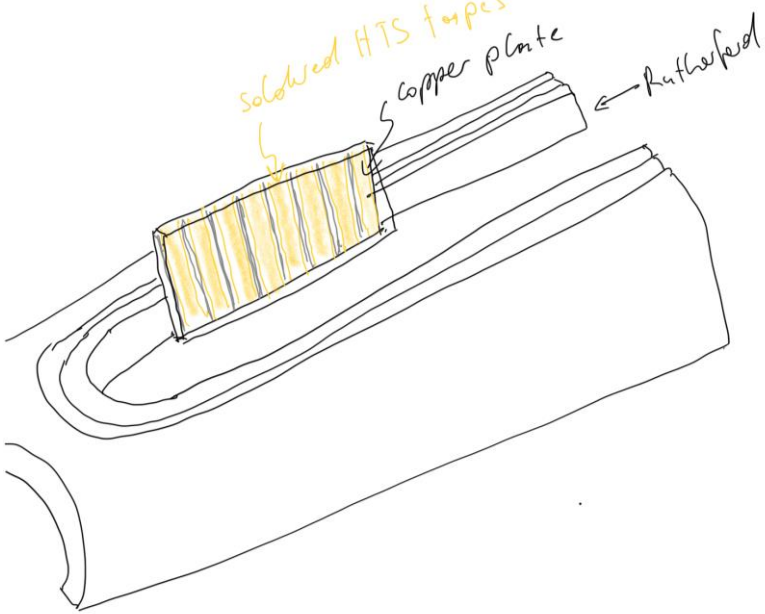

  - Plan-C: conventional double-pancake with axial fixed point between layers.

Additional thoughts on SMCT

Some special technologies are needed:

- Insulation:
  - insulating coating of the former and/or mica wrap on cable.
- Binder with compatible chemistry – if needed:
  - Reinforcement of Rutherford matrix in the ends during winding.
  - Layer curing step.
- Filling of gaps in coilends:
  - Some gaps will be inevitable for a wind-in-slot technology.
  - Sedimentation filling of the gaps would be most efficient – end impregnation like in LHC MB?
- Coil assembly:
  - Filler layer applied by dye coating that is soft at RT and hard at cold.
- Higher-E-modulus wax or alternative “no-quench” material:
  - Higher e-modulus, compatible with no-quench cracking and bonding behavior would provide additional mechanical margin.
  - Low-strength epoxy may achieve this goal.

All special technologies can be introduced and tested in subscale magnets and/or BOX settings.

Overview

- Final remarks on CCT
- LTS Roadmap Thoughts and Conclusions
- MagDev1 Status and MagDev2 Project Plan
- A word on MagNum
- Conculsions

MagDev1 Status

CHART2: Accelerator Magnets

WP0: Management, coordination

WP1: Infrastructure

- T1.1: CHART2 facility specification and construction follow-up
  Partners: PSI
  Sub-contractors:
- T1.2: CHART1 move
  Partners: PSI
  Sub-contractors:
- T1.3: CHART2 equipment spec., procurement, commissioning
  Partners: PSI, CERN
  Sub-contractors:
  85%
- T1.4: Cryogen-free test station upgrade
  Partners: PSI, CERN
  Sub-contractors:
  90%

WP2: Enabling Technologies

- T2.1: Adhesion and impregnation techniques
  Partners: ETHZ, PSI, CERN
  Sub-contractors:
  80%
- T2.2: Advanced manufacturing
  Partner:
  Sub-contractors: : Inspire (ETHZ), commercial partner
  60%
- T2.3: Full and partial insulation schemes
  Partners: PSI, CERN
  Sub-contractors: von Roll, Oerlikon Metco
  80%
- T2.4: Mechanical coil interfaces
  Partners: PSI, CERN, ETHZ
  Sub-contractors:
  50%
- T2.5: Mitigation of Reaction Residues
  Partners:
  Sub-contractors:
  60%
- T2.6: Splicing and solder impregnation
  Partners: PSI, CERN, KIT
  Sub-contractors:
  85%

WP3: LTS Magnet R&D

- T3.1: Manufacturing trials
  Partners: PSI
  Sub-contractors:
- T3.3: BOX design, construction and test
  Partners: PSI, U-Twente, LBNL
  Sub-contractors:
- T3.3: BigBOX design, construction and test
  Partners: BNL / US-MDP
  Sub-contractors:
  40%
- T3.4: LTS HFM design studies
  Partners: PSI, CERN
  Sub-contractors:

W45: HTS Magnet R&D

- T4.1: Non-insulated technology coil design, construction, and testing
  Partners: PSI, CERN, KIT
  Sub-contractors:
  80%
- T4.2: Coil stack construction and testing
  Partners: PSI, CERN, KIT
  Sub-contractors:
  70%
- T4.3: Partially-insulated technology coil construction and testing
  Partners: PSI, CERN, KIT
  Sub-contractors:
  20%
- T4.4: HTS applications design studies
  Partners:: PSI, CERN, KIT
  Sub-contractors:
  85%

Much progress despite COVID-19 related delays in hiring (and lab activities).
Last hire will start January 2022.

MagDev2 Goals Summary

- Nb3Sn: strive for robust performance at reasonable cost
- HTS: give a first answer, based on proof-of-concept studies and FEA, as to what an HTS accelerator magnet with REBCO tape might look like and how to address the key technological challenges.

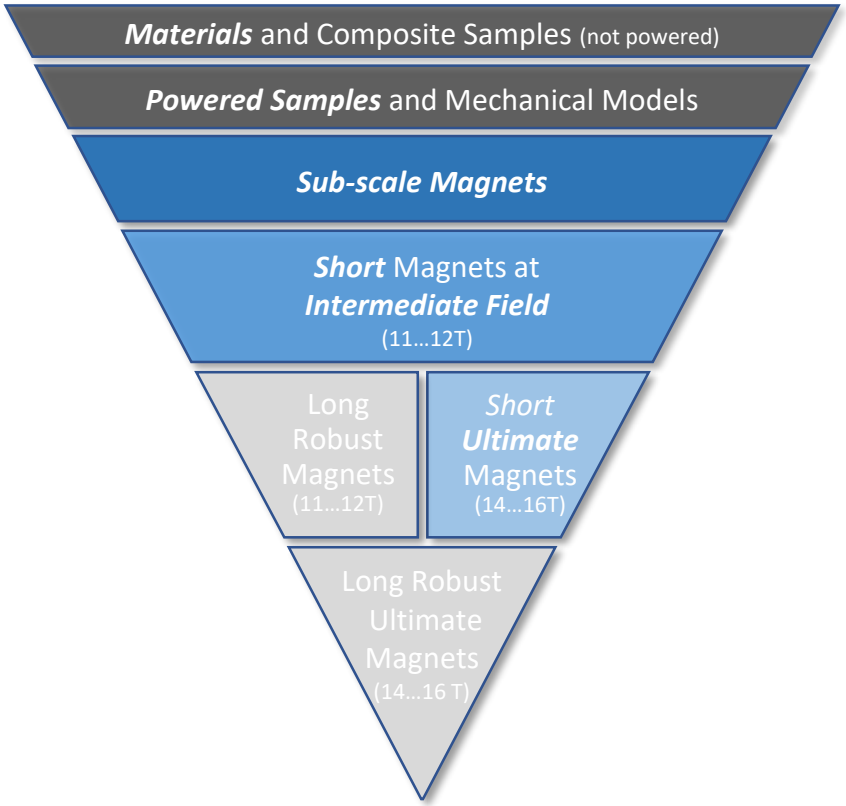

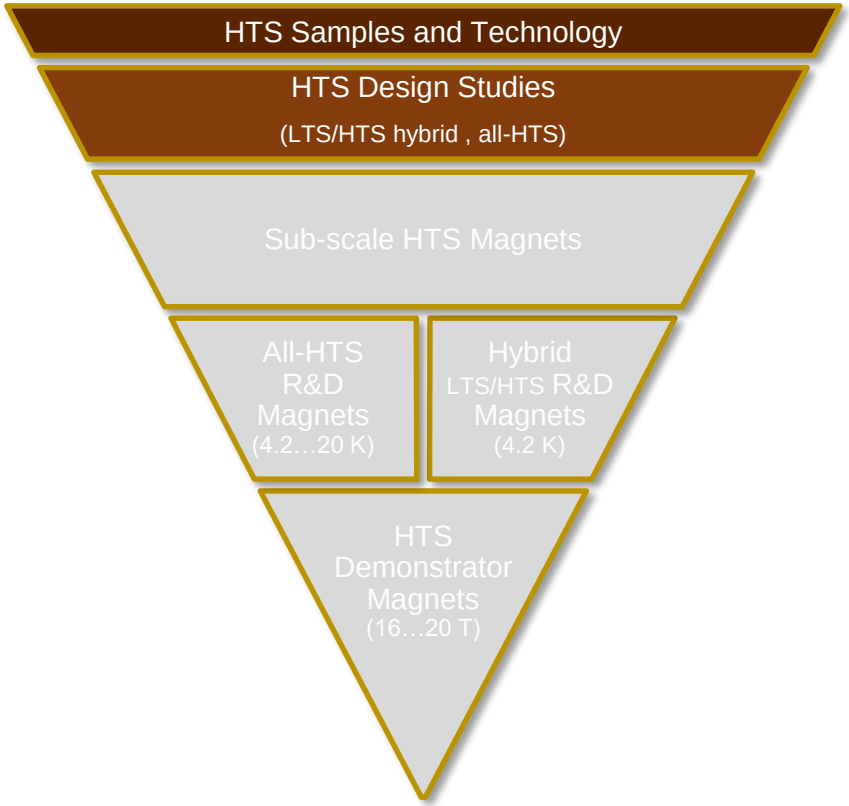

Adapted from LDG HFM roadmap chapter, P. Vedrine et al.

MagDev2 Task Overview

Swiss Accelerator Research and Technology

CHART2/MagDev2

WP0: Management, coordination

WP1: Infrastructure

- T1.1: Finalization VPI Setup
  Partners: PSI
  Sub-contractors:
- T1.2: Mechanical Assembly and Testing
  Partners: PSI
  Sub-contractors:

WP2: Enabling Technologies

- T2.1: Insulation de-sizing, curing
  Partners: PSI
  Sub-contractors: von Roll
- T2.2: Infiltration Materials, Composites, and Processes
  Partners: ETHZ, PSI, CERN
  Sub-contractors:
- T2.3: Additive Manufacturing
  Partner:
  Sub-contractors: : Inspire (ETHZ), commercial partner
- T2.4: Mechanical coil interfaces
  Partners: PSI, CERN, ETHZ
  Sub-contractors:
- T2.5: Advanced Design Techniques
  Partners: ETHZ, PSI, CERN, LBNL
  Sub-contractors:
- T2.6: Advanced Insulation Systems for REBCO Tape Stacks
  Partners: PSI
  Sub-contractors:

WP3: LTS Magnet R&D

- T3.1: Subscale Magnets
  Partners: PSI
  Sub-contractors:
- T3.2: Conceptual design fof intermediate-field and ultimate-field demonstrators
  Partners: PSI
  Sub-contractors:
- T3.3: Intermediate-field Demonstrator Program
  Partners: PSI,
  Sub-contractors:
- T3.4: Preparation of Ultimate-field Demonstrator
  Partners: PSI
  Sub-contractors:

W4: HTS Magnet R&D

- T4.1: SLS2.0 HTS SuperBend Technology Demonstrator
  Partners: PSI, TEL
  Sub-contractors:
- T4.2: FCCee Injector Test Stand Capture Solenoid
  Partners:: PSI
  Sub-contractors:
- T4.3: HTS Insulation and Cable Technologies
  Partners: PSI
  Sub-contractors:
- T4.4: HTS Roadmap Conceptual Design Study
  Partners:: PSI, CERN
  Sub-contractors:

MagDev2 Gantt Chart

CHART2 MagDev2				Partners							Phase 1 (Month)
Nr.	Action			PSI	CERN	ETHZ-SMG	ETHZ-Inspire	ETHZ-IEF	TEL	US-MDP	1 2 3 4 5 6 7 8 9 10 11 12 13 14 15 16 17 18 19 20 21 22 23 24 25 26 27 28 29 30
1	**WP**	**0**	**Projectmanagement**	X	X						
2	**WP**	**1**	**Infrastructure**	X							
3	**T**	1.1	Finalization VPI Setup	X							
4	**MS**	1.1	Commissioning	X							
5	**T**	1.2	Mechanical Assembly and Testing	X							
6	**D**	1.1	Commissioning Report	X							
7	**MS**	1.2	*MagDev Laboratory Complete*	X							
8	**WP**	**2**	**EnablingTechnologies**	X	X	X	X	X		X	
9	**T**	2.1	Insulation fibre, de-sizing, curing	X							
10	**T**	2.2	Infiltration Materials, Composites, and Processes	X	X	X					
11	**T**	2.3	Additive Manufacturing	X			X				
12	**D**	2.1	*Thesis Chapters*				X				
13	**T**	2.4	Mechanical coil interfaces	X							
14	**D**	2.2	Test reports	X							
15	**T**	2.5	Advanced Design Techniques	X	X			X		X	
16	**MS**	2.1	*Handover of PoC workflows and IT infrastructure*	X	X			X		X	
17	**MS**	2.2	*Community workshop*	X	X			X		X	
18	**T**	2.6	Advanced Insulation Systems for REBCO Tape Stacks	X							
19	**MS**	2.3	*MagDev2 Technical Review*	X	X	X	X	X			
20	**D**	2.3	*MagDev2 Reports*	X	X	X	X	X			
21	**WP**	**3**	**LTS Magnet R&D**	X	X						
22	**T**	3.1	Subscale Magnet Program	X	X						
23	**D**	3.1	Subscale tests	X	X						
24	**T**	3.2	Conceptual design for intermediate-field and ultimate-field demonstrators	X							
25	**D**	3.1	*CDR, Technical Drawings*	X							
26	**MS**	3.1	*Conceptual Design Review*	X	X						
27	**MS**	3.2	*Manufacturing Readiness Review*	X	X						
28	**T**	3.3	Intermediate-field Demonstrator Program	X	X						
29	**D**	3.2	*Intermediate-field Magnet Tests*	X	X						
30	**T**	3.4	Ultimate-field Demonstrator Preparation	X							
31	**D**	3.3	*Report on Manufacturing Trials and Tooling Status*	X							
32	**MS**	3.3	*MagDev2 Technical Review*	X	X						
33	**WP**	**4**	**HTS Magnet R&D**	X	X				X		
34	**T**	4.1	Superbend Demonstrator	X					X		
35	**D**	4.1	*Demonstrator test*	X					X		
36	**T**	4.2	*FCCee injector test stand capture solenoid*						X		
37	**D**	4.2	*Handover of capture solenoid for integration*								
38	**T**	4.2	HTS Insulation and Cable Technologies	X							
39	**D**	4.3	*HFM demonstrator coil test*	X	X						
40	**T**	4.4	HTS Roadmap Conceptual Study	X							
41	**D**	4.3	Roadmap report	X							
42	**MS**	4.1	*MagDev2 Technical Review*	X	X						
43	**MS**	5.0	*CHART Council Meeting*	X	X	X	X	X			

Risk Analysis

Risk N°	Nb3Sn - Description of risk	WP(s) involved	Severity and impact on project (Low / Medium / High)	Probability (Low / Medium / High)	Proposed risk-mitigation measures
1	HTS lead-out does not work	2,3,4	Medium	Medium	Study HTS radial layer-jump; eventually, accept double-pancake winding and adapt reaction and impregnation procedures
2	Insulating coating does not work	2,3	Medium	Medium	Study mica-wrap or 11-T style insulation
3	Light wrap-around tooling insufficient	3	Low	Medium	Design and construct molds; if necessary, re-furbish furnace or react at a partner lab
4	SM-structure mechanics poses problems	3	Medium	Low	Introduce clamping features between the poles
5	SM-CT hits an unforeseen roadblock	3	High	Low	Plan B: explore in-depth a low-to-medium-prestess design with lubricated contacts improved coil tolerances, and innovative end design.
6	Not enough testing capacity at CERN for fast-turnaround subscale program	3	Medium	Medium	Follow invitation to test as an insert in Sultan facility - possibly, but not necessarily with backround field.
...					
Risk N°	**HTS - Description of risk**	**WP(s) involved**	**Severity and impact on project (Low / Medium / High)**	**Probability (Low / Medium / High)**	**Proposed risk-mitigation measures**
1	FCC-ee integrated dose too high	4, P3	High	Medium	Provide this feedback as soon as possible to CHART2 P3 and FCCee feasitbility study.
2	Personnel resources too limited to progress on SuperBend, capture solenoid, and HFM technology R&D	4, P3	Medium	Medium	Delay first operational test of HTS SuperBend.
3	Material budget insufficient	4	Medium	Low	Seek third-party financing; re-scope deliverables
...					

Overview

- Final remarks on CCT
- LTS Roadmap Thoughts and Conclusions
- MagDev1 Status and MagDev2 Project Plan
- A word on MagNum - DEMO
- Conculsions

Overview

- LTS Roadmap Thoughts and Conclusions
- MagDev1 Status and MagDev2 Project Plan
- A word on MagNum
- Conculsions

Summary

- CCT magnets are likely not suitable for an FCC-hh Nb3Sn main dipole.
- Low-prestress CT is an interesting field of research.
- Given the latest results with wax impregnation, we believe that SM-CT has the highest demonstration potential in the coming 5 years.
- The fast-turnaround scaled approach will help us develop technologies and test them at the earliest possible time at the smallest possible scale.
- Important milestones for 2022:
  - BigBOX test @ BNL
  - Subscale design and construction
  - Intermediate- and ultimate-field magnet cable plan and design