Electrostatic Time Dilation

Howard A. Landman

26 Jan 2022

Theory (from QM)

Stationary solutions to the Schrödinger equation rotate phase at a rate governed by the energy: $e^{-2\pi iEt/h}$.

The S.E. doesn't care what kind of energy this is. Total energy is

$$E = mc^2 + U_g + U_{em} + U_w + U_s + \ldots$$

QM treats all potentials equally.

GTD and EMTD (from QM)

For a gravitational potential, QM predicts frequencies at different heights of

- $\nu_0 = E_0/h = mc^2/h$ $\quad$ $\nu_z = E_z/h = (mc^2 + mgz)/h$
- $T_d = \nu_z/\nu_0 = (mc^2 + mgz)/mc^2 = 1 + mgz/mc^2$

This is exactly the linear “weak field approximation” to gravitational time dilation. QM and GR *agree* on GTD.

For static electric potential V, we get

- $T_d = \nu_V/\nu_0 = (mc^2 + qV)/mc^2 = 1 + qV/mc^2$

This predicts an electrostatic time dilation for charged particles.

Multiple theorists predict this effect

- Apsel (1978-81): $d\tau = (1/c)[(g_{\mu\nu}dx^{\mu}dx^{\nu})^{1/2} + (q/mc^2)A_{\mu}dx^{\mu})]$

  "the physical time associated with the trajectory of a classical particle is related to the beats of the quasi-classical quantum mechanical wave function associated with the particle"

- Ryff (1985):

  "when $L = mc(g_{\mu\nu}v^{\mu}v^{\nu})^{1/2} + (q/c)A_{\mu}v^{\mu})$ we recover Apsel's relation. … the alteration of the lifetime of a particle in a field and its equation of motion can be derived from the same assumptions"

- van Holten (~1989-92): $dt = d\tau(E - q\phi)/M$

  "any quantity which contributes to the energy E in an observable way, also contributes to the time dilation"

- Ringermacher (1994-2001): $d\tau_2/d\tau_1 = 1 - 2e(\phi_2-\phi_1)/mc^2$

  "it would seem that electromagnetic potentials … should be on equal footing with the gravitational potentials"

- Özer (1999-2020): $\Delta T(d) = \Delta T(0)(1 + (q|E|d)/mc^2)$ (where $|E|d = \Delta V$)

- Landman (2009-2021): $Td = \exp(qV/mc^2) \approx 1 + qV/mc^2$

- Yablon (1980?-2018): $\gamma_{em} = dt/d\tau \approx 1 + q\phi_0/mc^2$

  "Time sees all energy."

But there are some differences

- Consensus version predicts higher energy speeds up time

  $$Td \approx 1 + qV/mc^2$$

- Ringermacher's version gives twice as large an effect

  $$Td \approx 1 + 2qV/mc^2$$

- Yablon's version reverses the sign (higher energy slows down time)

  $$Td \approx 1 - qV/mc^2$$

- Reisner-Nordström metric predicts zero first-order effect

  $$Td \approx 1$$

Previous experiments

Tests looking for some kind of EMTD date back to 1931, but all of them used neutral particles (Hg atom, Rb atom) and/or spectroscopic methods.

- Neutral particles (q=0) give zero predicted effect.
- Spectroscopic methods can’t show any effect because of energy conservation. (Excite particle, move into potential, de-excite, move out of potential. The moves cancel, so the excite and de-excite must also.)

This experiment

Measure μ^+ and μ^- decay times, at rest, in a plastic scintillator inside a Van de Graaff generator at 0 V and ±700 kV.

For a μ^- at -700 kV or a μ^+ at +700 kV we expect

$$Td \approx 1 + qV/m_\mu c^2 = 1 + 0.7 \text{ MeV} / 105.658 \text{ MeV} \approx 1.0066 \text{ faster decay}$$

Bootstrap MC

Simulated μ^+ results with 100 nS σ Gaussian noise added

For μ^-, the red and blue peaks would swap places.

If there is no effect, the blue and red peaks would be on top of the green peak.

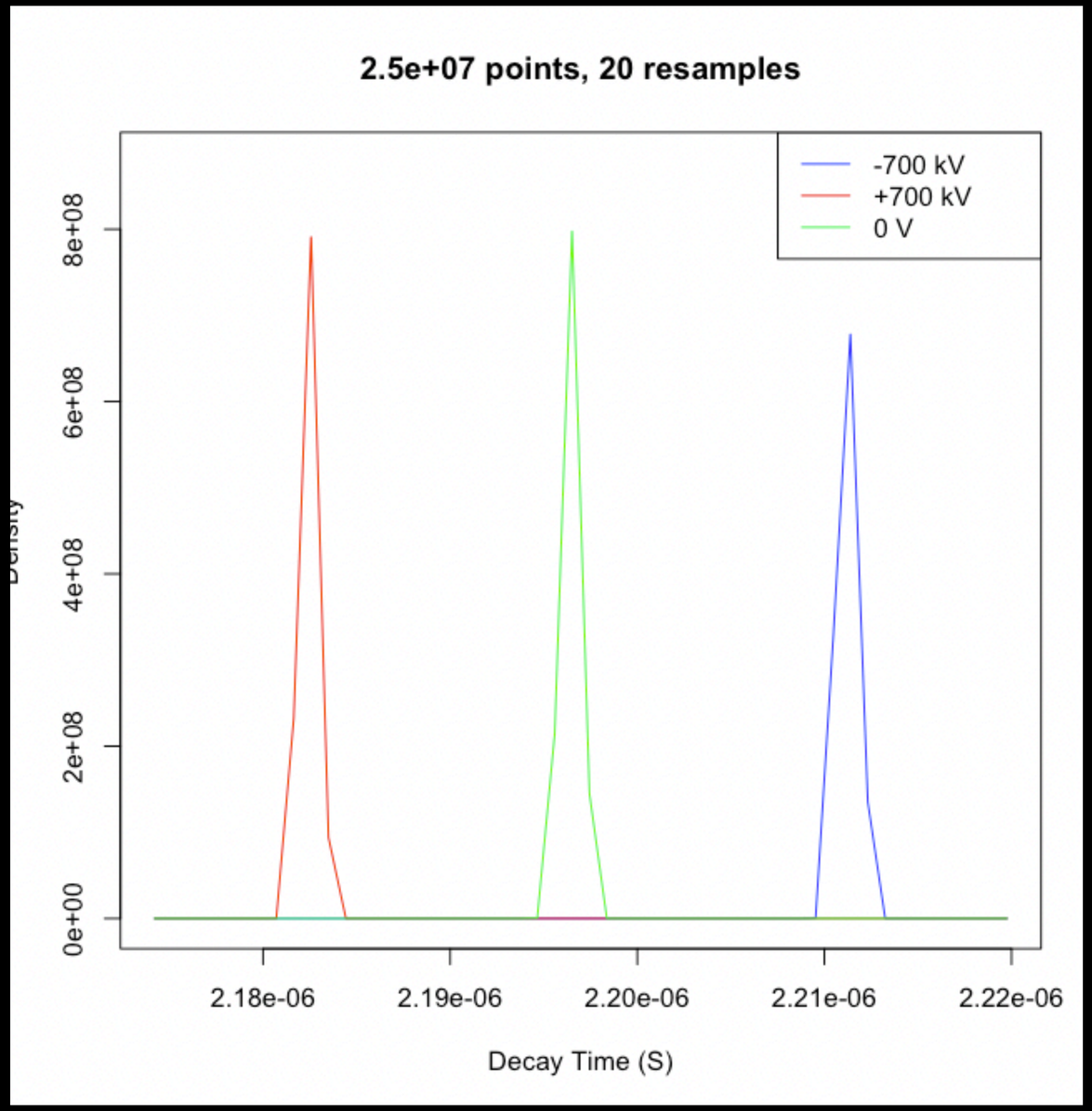

In-sphere system

- 75 mm diameter X 57 mm thick BC-412, Photonis XP5312, EMCO L15AS HV supply
- PRA1762 100MHz Amp Discriminator NIM BIN module
- TDC7201 Time-to-Digital Converter chip (55 pS resolution)
- Raspberry Pi 3B+ (or 4B, or Zero2) with USB stick for data storage
- Si5351A clock generator (optional)
- Batteries

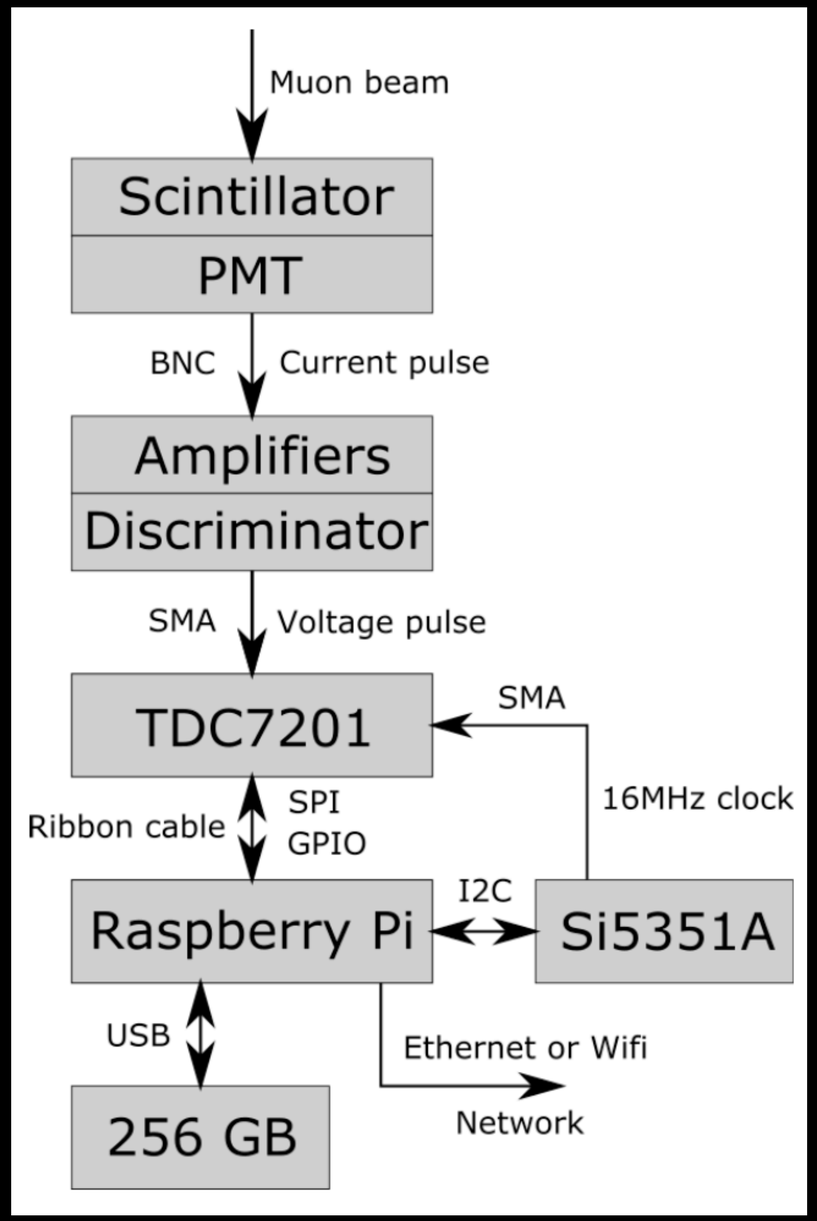

Some components

Counterclockwise from left:

- BC-412 + Photonis XP5312
- PRA1762
- TDC7201-ZAX-EVM
- Raspberry Pi 3B+
- 5V / 12V battery

Van De Graaff Generator

Raspberry Pi

Model	**Raspberry Pi Zero W Rev 1.1**
OS	**Raspbian GNU/Linux 10 (buster)**

CPU Temperature

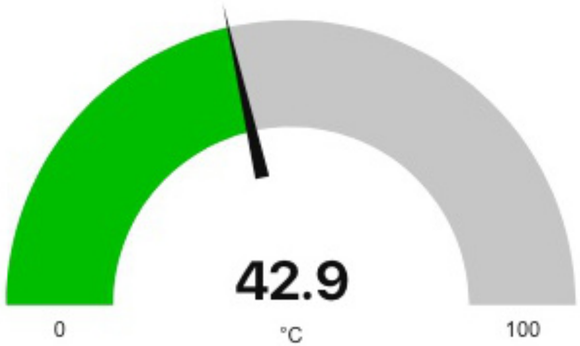

TDC7201

Python3 tdc7201 driver version	**0.5b2**

measurements

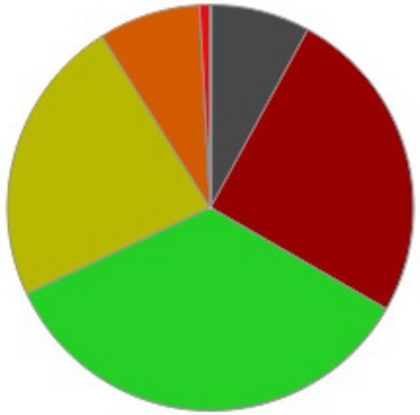

Last Batch	**[652, 2077, 2842, 1885, 666, 70, 0, 0, 0, 0, 0, 0, 0, 0]**

Valid measurements per batch

Proposal: 3 phases

Phase 0: Development and testing (μ^+)

- Make sure works in PSI environment
- Establish realistic data rate
- Determine what improvements should be made
- Measure μ^+ effect to 2-3 σ

Phase 1: μ^+ to 5 σ

Phase 2: μ^- to 5 σ

Summary

A class of unified theories makes similar predictions.

At least one prediction (EM time dilation) is easily testable.

The test can be done inexpensively.

Q & A

Wait, what?!

If that were true, then:

- Absolute electrostatic potential would be measurable (by comparing decay times of (say) muons and antimuons).
- EM gauge transformations would alter the physics. Only the Coulomb/radiation gauge would be physically realistic.
- The Maxwell equations would not be a complete description of even classical EM (since EMTD is a purely classical effect).
- The Reissner-Nordström metric would be wrong.

About Howard A. Landman

BA Math (honors), UC Berkeley. Top 100, Putnam competition. Two published pure math papers (in combinatorial game theory).

MS Computer Science, UC Berkeley. Co-designer of Berkeley RISC I (first RISC microprocessor).

Career as integrated circuit designer and/or software developer. Worked on dozens of chips. Co-designer of Sony PlayStation 2 “Emotion Engine” main processor (first commercial 128-bit microprocessor). Wrote about 300k lines of code. About 19 electronic engineering publications, plus a few in other fields (cryptography, nanotechnology).

H-index 9

Physics (“Well, how did I get here?”)

Retired early. Started studying quantum computing in early 2000s. Audited upper division QM, graduate QM, QFT, Classical EM, Math Methods classes at Colorado State.

In March 2009, saw link between change of phase frequency with energy in QM and change of time with potential in GR. Started pursuing that.

13 years later, here we are. Main contributions to this field: doing the literature search and finding all(?) the previous research, finding simple ways of understanding the theory, and developing this experiment.

Why not use cosmic rays?

Cosmogenic muons about 53% μ^+ and 47% μ^-

- This loses 94% of the signal
- Therefore requires $(0.06)^{-2}$ = 278 times as much data

Data rate is too slow (less than 1 stopped decay event per minute)

- Would take decades even with pure source

Higher Voltage?

- Could reduce beam time if voltage were higher
  - Data needed $\propto V^{-2}$
  - 2x voltage requires ¼x data
- Voltage $\propto$ VDGG sphere diameter
  - Need to address safety issues
- Other methods (e.g. active charge injection) could also help