PAUL SCHERRER INSTITUT

Low Level RF Workshop 2022
Poster #3

Consolidation of SwissFEL LLRF System

Z. Geng (*zheqiao.geng@psi.ch*), **M. Jurcevic**, **R. Kalt**, **W. Koprek**, Paul Scherrer Institut (PSI), CH-5232 Villigen PSI, Switzerland

Abstract

SwissFEL LLRF system was well designed with precise RF detection, reliable amplitude and phase feedback, and high degree automation. After the start of user operation, new requirements on robustness and reproducibility have been raised for LLRF. Efforts have been spent to consolidate the LLRF system. We implemented lookup table-based algorithms for the fast setup of klystrons for desired operating points. Amplitude feedback loops manipulating the klystron high-voltage were implemented for C-band klystrons operating in saturation for long-term stability. We optimized the reference tracking scheme for preserving the beam phase after rebooting or power cycling any LLRF components. The race conditions between LLRF triggers and clocks were smartly handled in LLRF firmware. This poster illustrates these consolidations and their results at SwissFEL.

Introduction

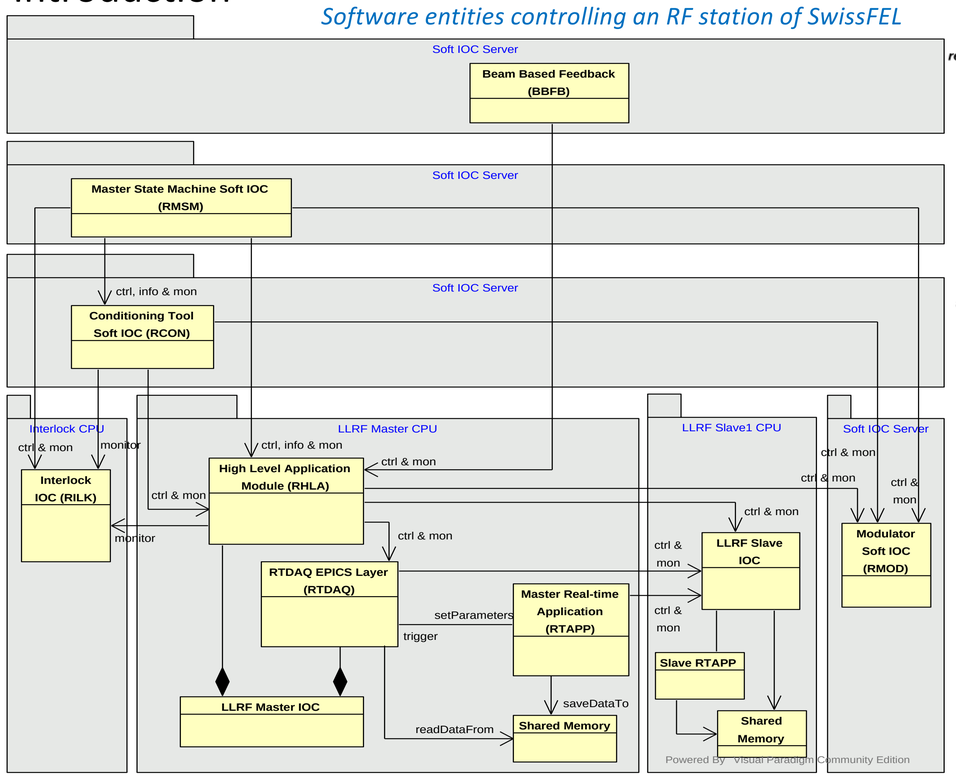

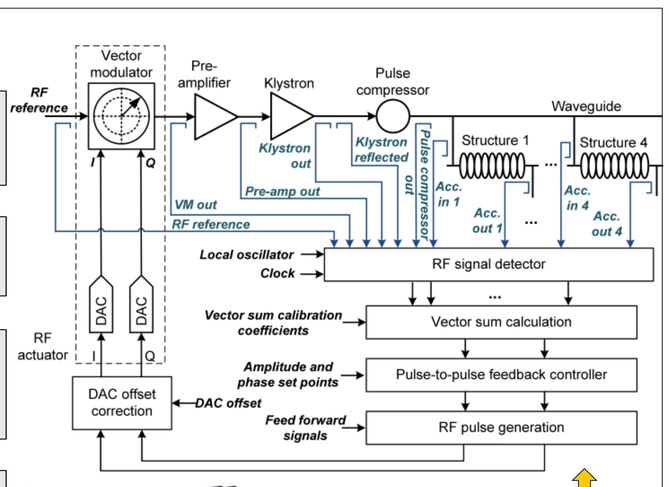

Block diagram of an RF station including HPRF and LLRF

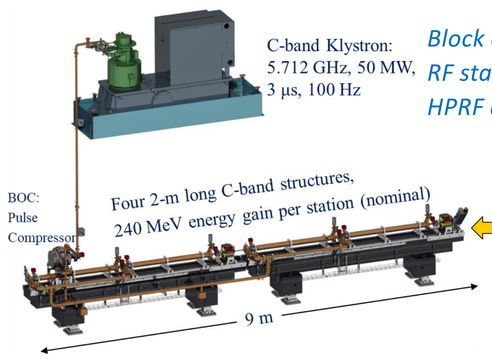

A typical C-band HPRF station

- Complex software architecture makes the handling of all potential exceptions difficult, especially when trying to recover in automatic way from any type of interlock trips
- Consolidation (mainly software and firmware) is required to improve the robustness, reproducibility, stability and automation level

RF Operating Point fast Setup

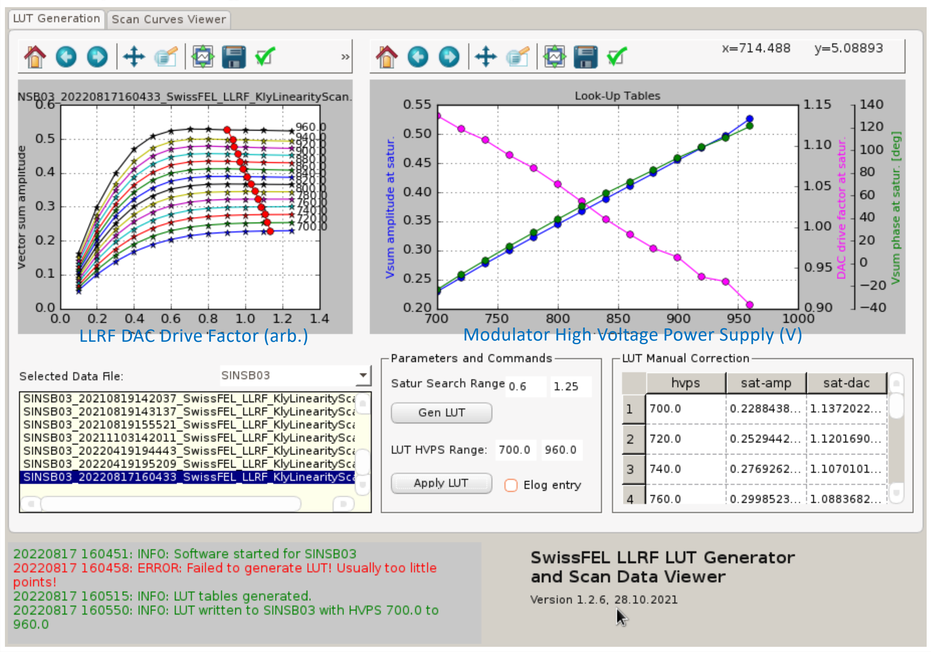

LLRF DAC Drive Factor (arb.)

Modulator High Voltage Power Supply (V)

Generating lookup table (LUT) from klystron gain-curve scanning

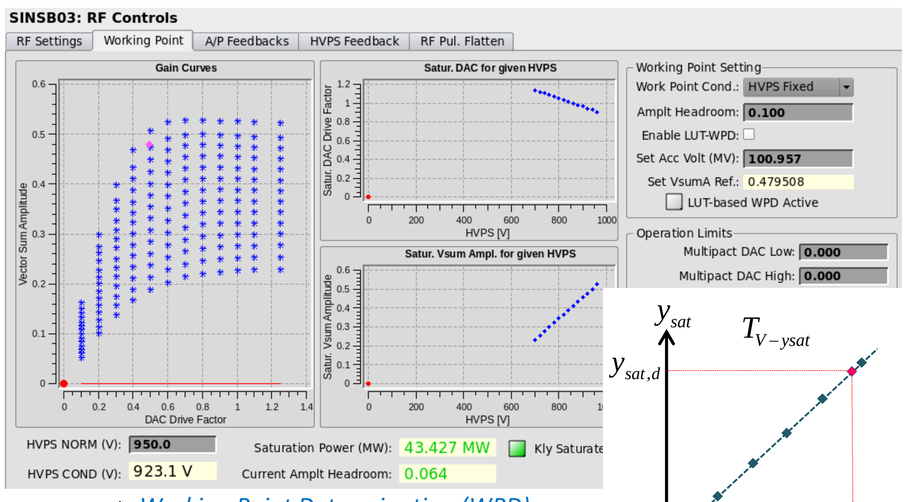

Working Point Determination (WPD) during run-time with LUT

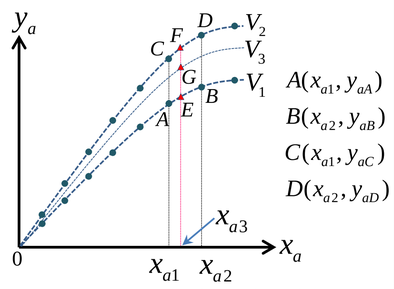

2D Interpolation Algorithm

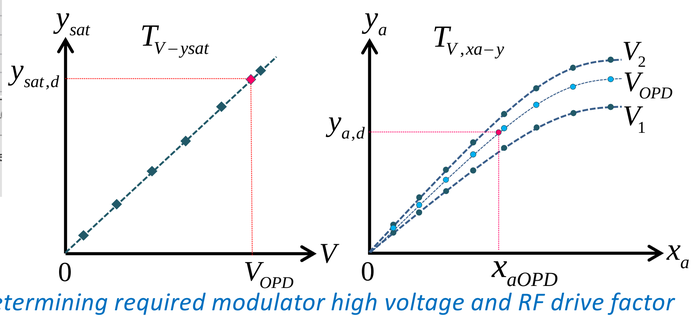

Determining required modulator high voltage and RF drive factor for given output amplitude and headroom from saturation

RF Amplitude Feedback using Modulator HVPS

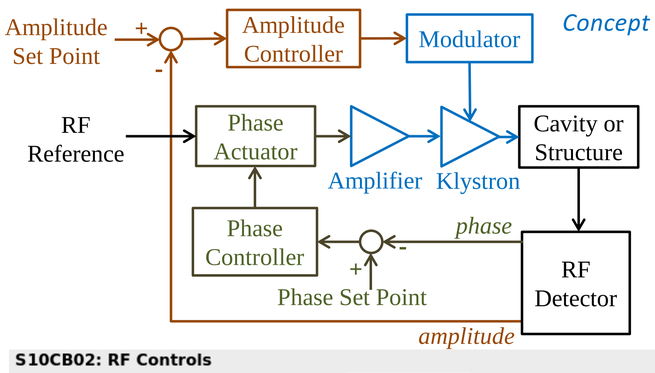

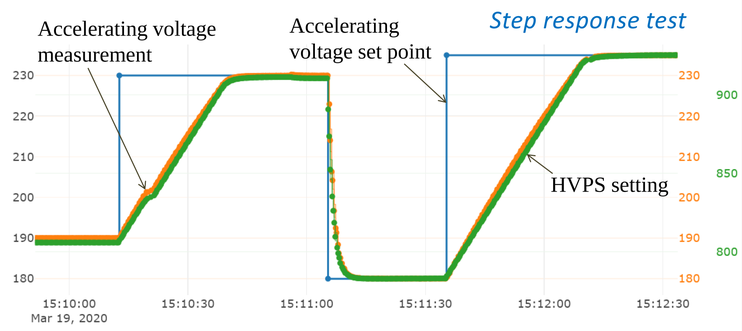

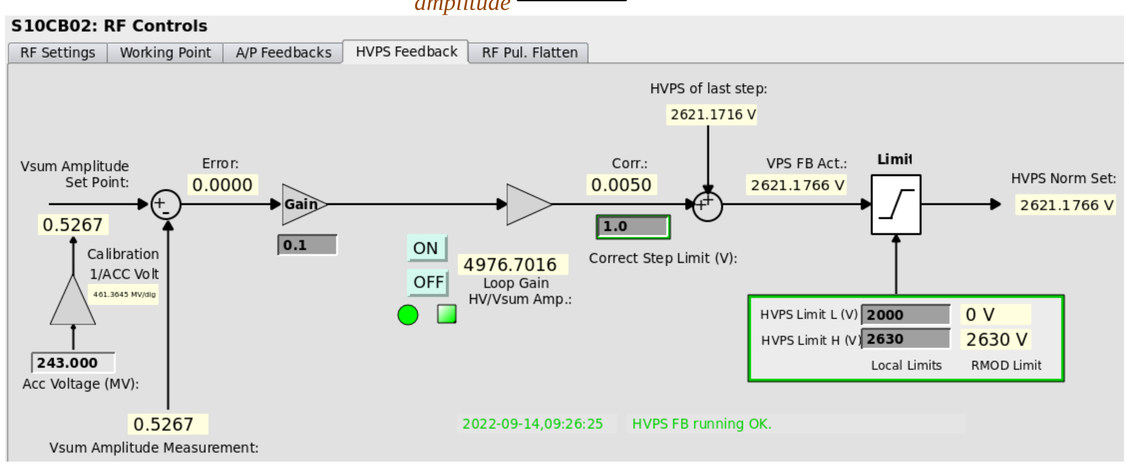

Software implementation:

- *Feedback rate = 4 Hz, compensating for slow drifts*
- *Automatic loop gain calibration*
- *Discrete integral control*
- *HVPS ramp up speed limit*
- *Absolute HVPS limit*

Reference Tracking Update

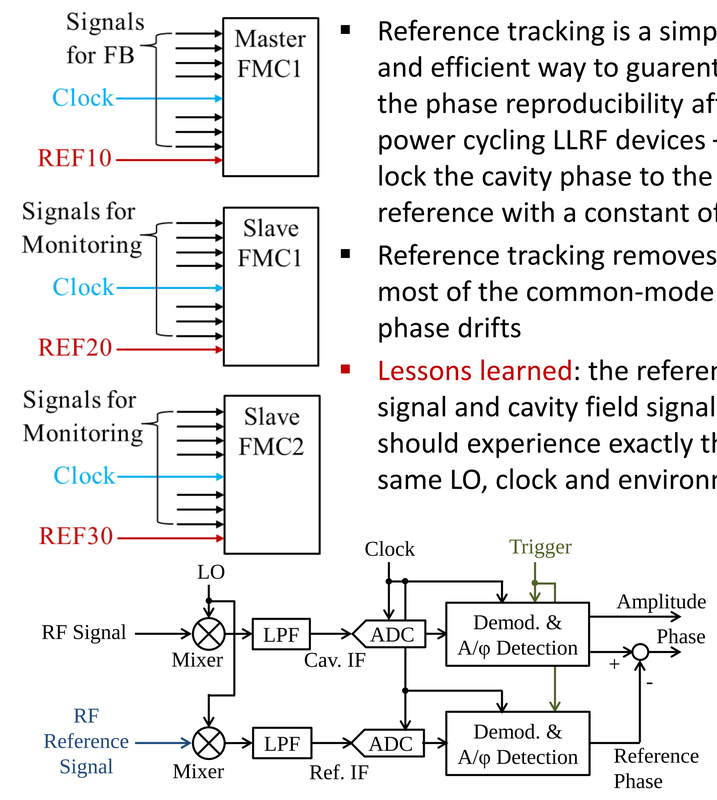

- Reference tracking is a simple and efficient way to guarentee the phase reproducibility after power cycling LLRF devices – lock the cavity phase to the reference with a constant offset
- Reference tracking removes most of the common-mode phase drifts
- Lessons learned: the reference signal and cavity field signals should experience exactly the same LO, clock and environment

Race Condition Handling in LLRF Firmware

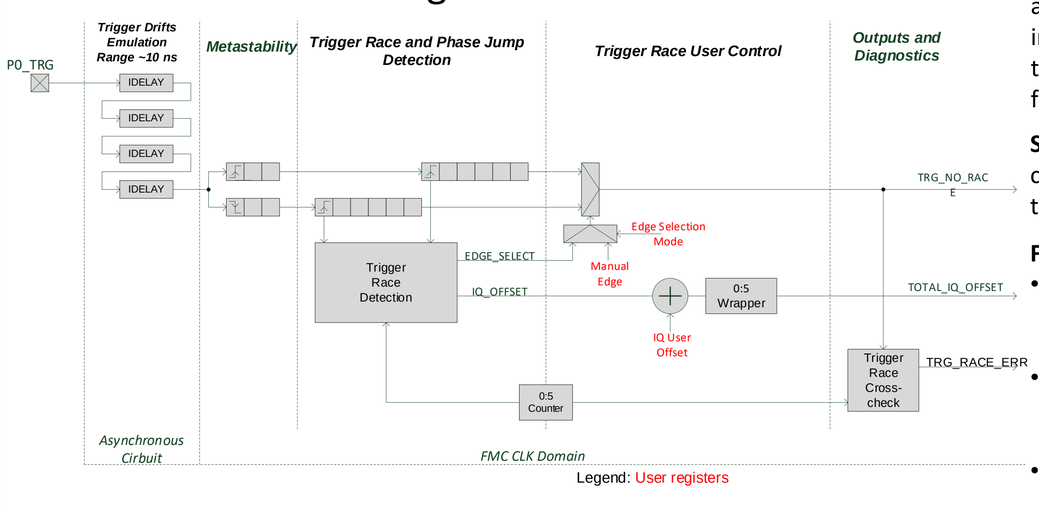

Problem: Phase drifts of the trigger and ADC clock lead to phase jump in the IQ demodulator, which in turn leads to big phase error in the feedback loop.

Solution: Monitoring and fast correction of the phase offset in the IQ demodulator in firmware.

Features:

- Continuous monitoring and jump detection for each RF pulse
- Forward correction of the IQ demodulator phase offset in the same pulse
- Dynamic range of +/- 5 ADC clock cycles

Conclusion and Outlook

Many other consolidations (e.g., archiving data reduction, two-bunch operation support, reliable water temperature adjustment to tune cavities, RF-beam jitter correlation, machine-level timing relation diagnostics and recovery, etc.) have been performed for the SwissFEL LLRF system, resulting in reliable and stable operation of SwissFEL.

We keep improving the SwissFEL LLRF system, not only for single RF stations' control, but also for better integrating it into the operation of the entire machine. The near future work includes compensating for the 50 Hz AC disturbance on cavity fields, optimizing RF power distribution within multiple stations for reducing the total fault rate, and understanding and mitigating the drifts in the RF system, Gun laser and synchronization system.