PETRA IV 500MHz LLRF System.

POSTER #25

J. Branlard, A. Eislage, M. Hierholzer, M. Hoffmann*, P. Huelsmann, F. Maschewski, R. Onken, S. Pfeiffer, H. Schlarb, H. Tamras, S. Wilke

Deutsches Elektronen-Synchrotron DESY, Germany

Abstract

For the new PETRA IV project a new LLRF system based on MicroTCA.4 is foreseen. It will be used to control 24 cavities at 500MHz and 24 cavities at 1.5GHz. In this contribution we will present the setup of a first prototype of the single cavity LLRF system operating at 500MHz continuous wave.

LLRF System Overview

- Beam loading compensation
- Slow and fast feedback
- Trip compensation
- Supervision, Interlock
- Data acquisition system

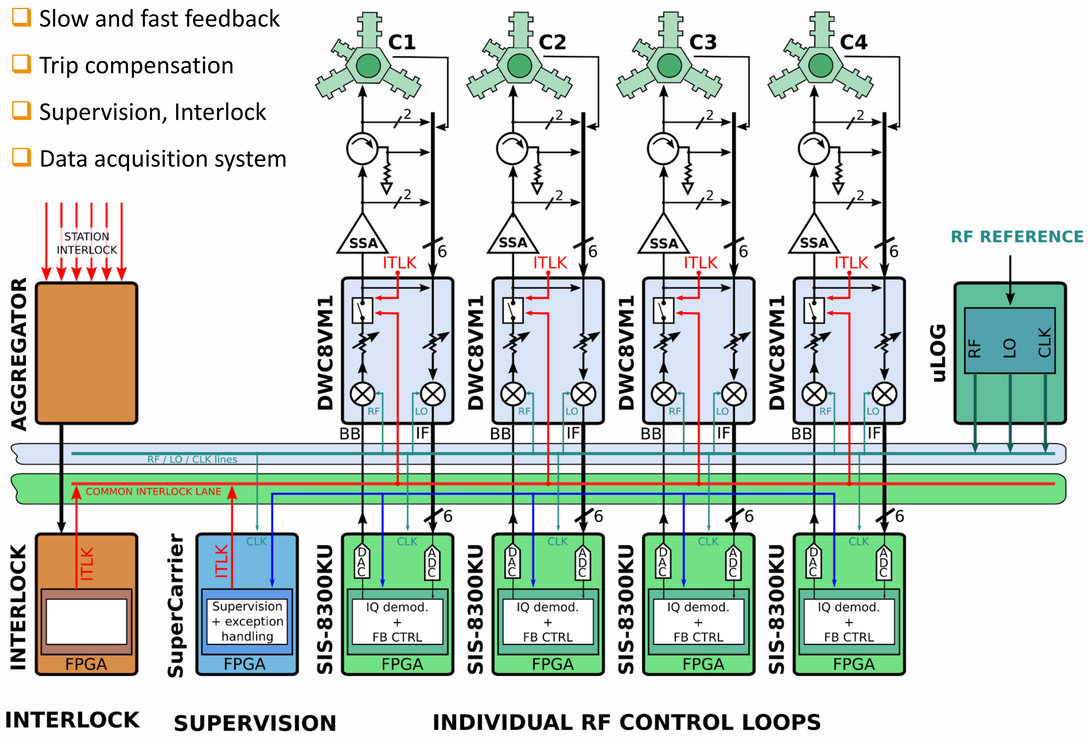

Firmware Structure

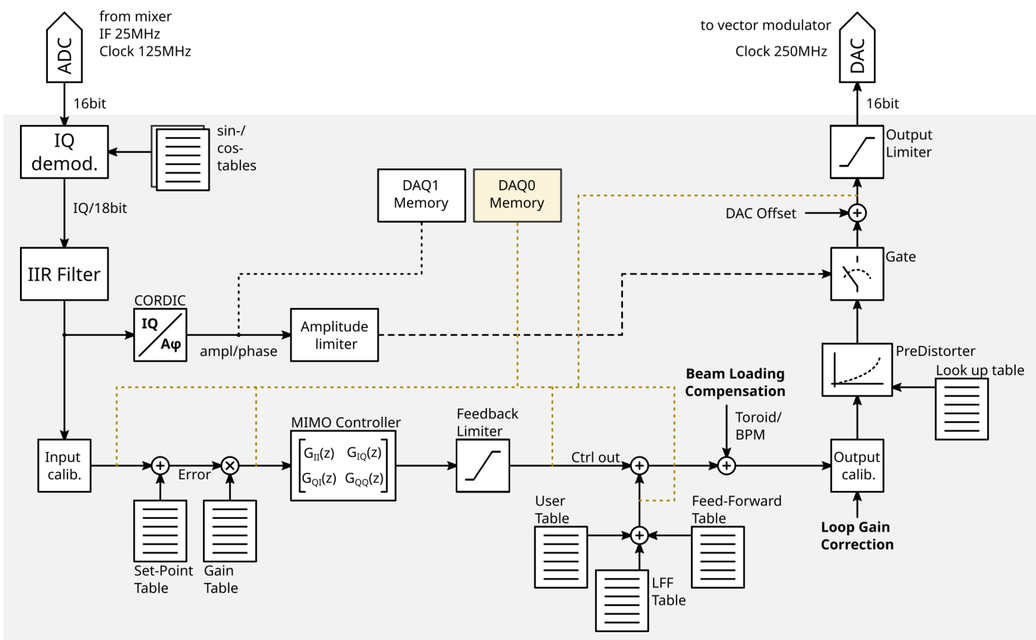

PETRA III Test Stand

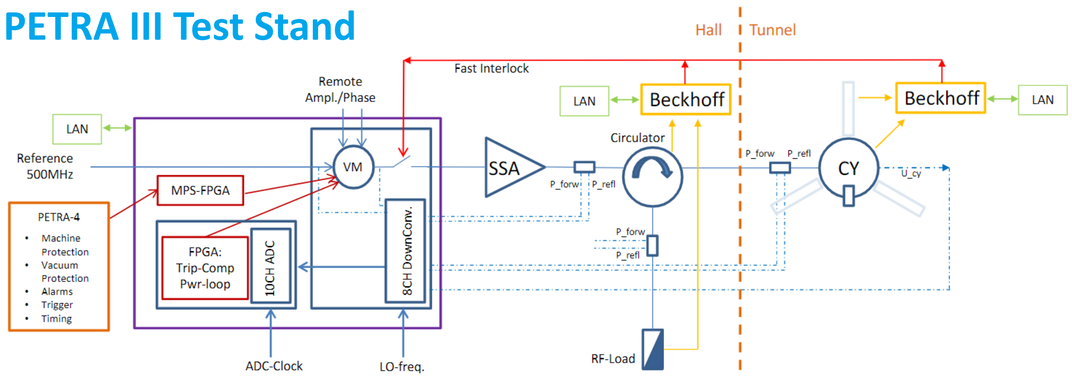

- Test of LLRF system with PETRA IV cavity and SSA
- Test during operation of PETRA III with beam

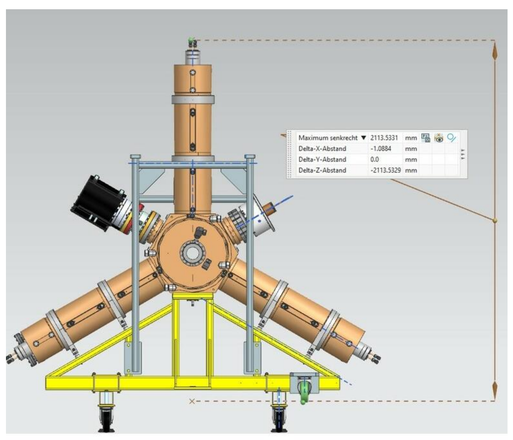

PETRA IV LLRF Parameter

- 500MHz CW single cavity control system
- Groups of 4 cavities, total 24 cavities at 500MHz
- Stability requirements: 0.1°, 0.1%
- One solid state amplifier (120kW) for each cavity
- Normal conductive HOM damped cavity
  - Q_0 >29.000, max. 700kV gap voltage
- 24 Cavities at 1500MHz, 3rd harmonic

Interlock Scheme

- Fast Interlock (RF Gate, <10us)
  - Arc detector in the waveguide
  - Cavity vacuum
  - Light detector at RF window
- Slow Interlock
  - Temperature (RF window, cavity water, SSA)
  - Waterflow (SSA, Cavity)
  - Airflow (RF window)
  - Vacuum (accelerator section)

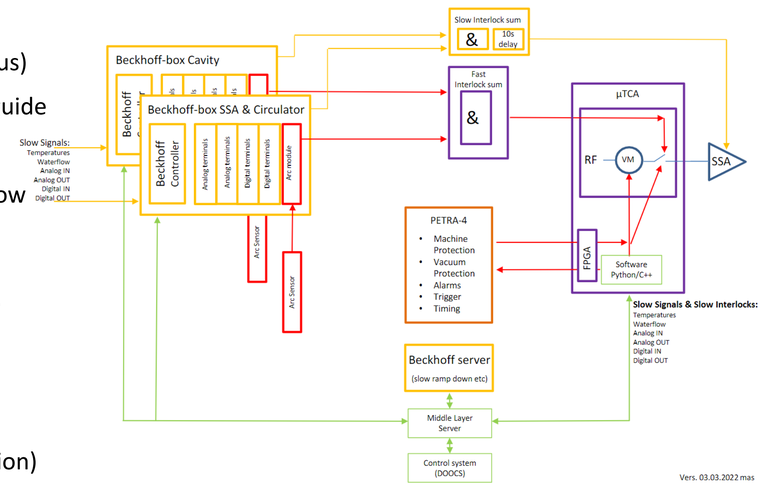

Laboratory Test Stand

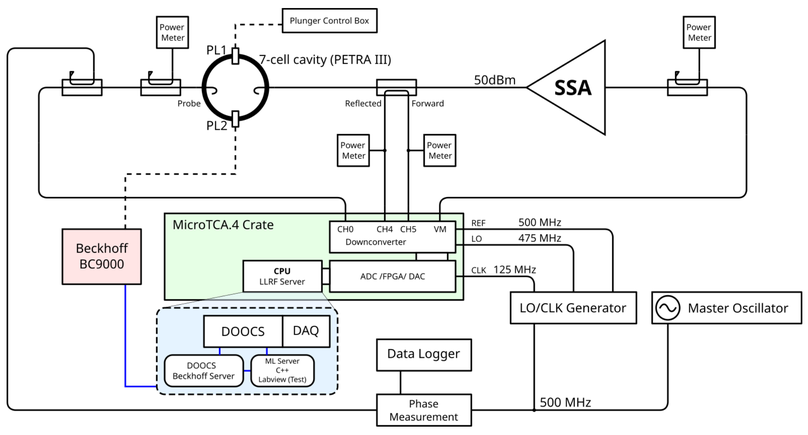

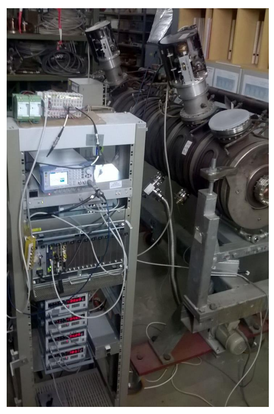

Test Stand Results

- Test of pre-distorter with solid-state-amplifier (100W)
- Disturbance rejection test with fast feedback controller
- Loop gain correction tests (OVC, slow feedback)
- Plunger control with OVC & beam loading simulation with external phase shifter

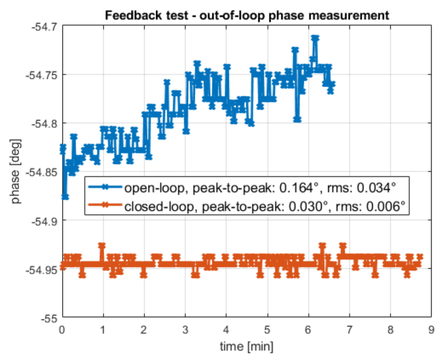

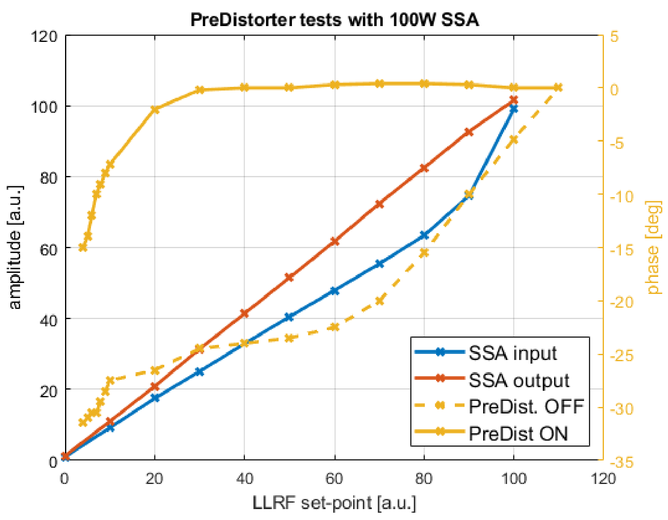

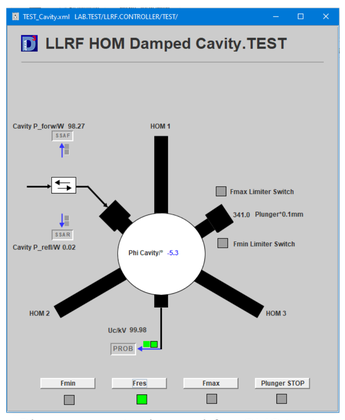

Plunger control panel for OVC tests

Disturbance rejection tests with MIMO controller

Feedback OFF Feedback ON

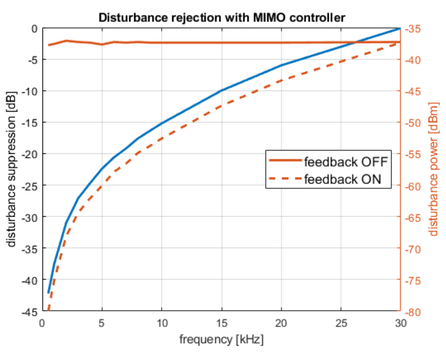

* m.hoffmann@desy.de

HELMHOLTZ
RESEARCH FOR GRAND CHALLENGES

PETRA IV. NEW DIMENSIONS

Low Level RF Workshop 2022
9-13 Oct 2022, Brugg-Windisch, Switzerland