BERKELEY LAB

LAWRENCE BERKELEY NATIONAL LABORATORY

U.S. DEPARTMENT OF ENERGY

Installation, Commissioning and Performance of Phase Reference Line for LCLS-II

Shreeharshini Murthy, Larry Doolittle (LBNL)
Charlie Xu, Bo Hong, Andrew Benwell, Jing Chen (SLAC)

LLRF'22 Workshop

Outline

- Introduction
- Phase Reference System
- Installation
- Cavity Phase Measurement Firmware
- Commissioning
- Performance
- Summary and Conclusions

Introduction

- LLRF job? Hold the amplitude and phase of each cavity's voltage constant
- MO subsystem generates - LO (1320 MHz), PRL (1300 MHz)
- From DC up to the closed-loop cavity bandwidth, the LLRF system locks the cavity phase using combination of LO and PRL sources
- At low frequencies only PRL contribution is significant
- Phase-averaging - cancel most phase drifts
- Analog domain phase-averaging technology used in field at SLAC and FNAL
- Digital technique used in this design

Phase Reference System

- VCO generates a **forward** reference at 1300 MHz, a virtual short returns a **reverse** reference signal
- Reflectometer technique - average phase of reference signals locked to the phase of MO
- Distance from the coupler to the MO determines the amount of phase difference
- PRL directional couplers provide both references to the LLRF rack

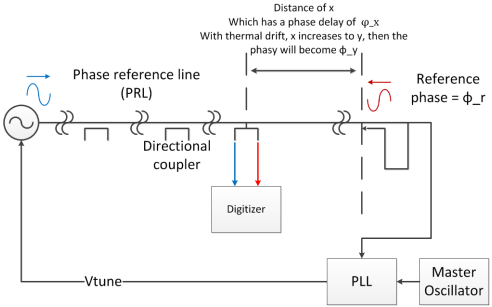

C. Xu et al., "*LCLS-II Phase Reference System*," LLRF'17 Barcelona

Installation

- PRL divided into 3 segments - L0+L1+LH (5 cryomodules), L2 (12 cryomodules) and L3 (20 cryomodules)
- L0 - 1 PRL taps, L1 - 2 PRL taps, LH - 2 taps, L2 - 6 PRL taps and L3 - 10 PRL taps
  - L0+L1+LH - 2 way splitter, L2+L3 - 4 way splitter
- Part of 2016 design, to cancel phase drifts due to temperature changes - install all coaxial cables to the LLRF rack from same roll with matching electrical lengths
- Attenuate PRL amplitude at the digitizer to reduce crosstalk

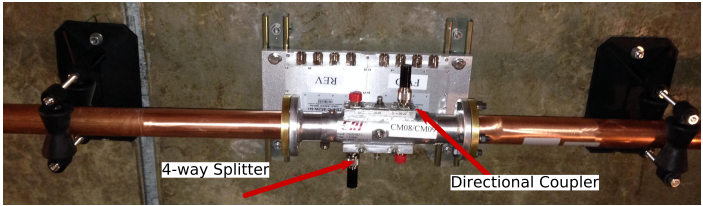

Physical installation of the PRL at L2.

Installation

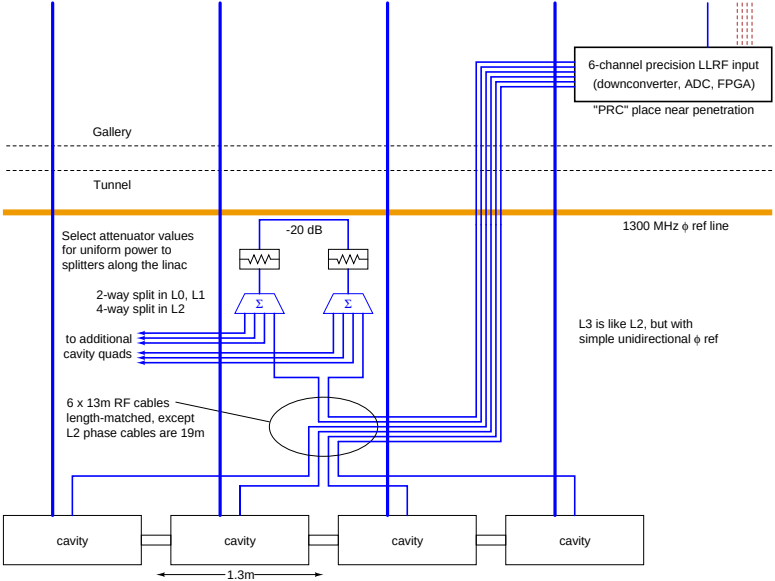

Cavity Phase Measurement Firmware (Tracking loop)

- Tracking loop pipeline delay - 30 cycles
- Utilization - 2 multipliers and 2 adders

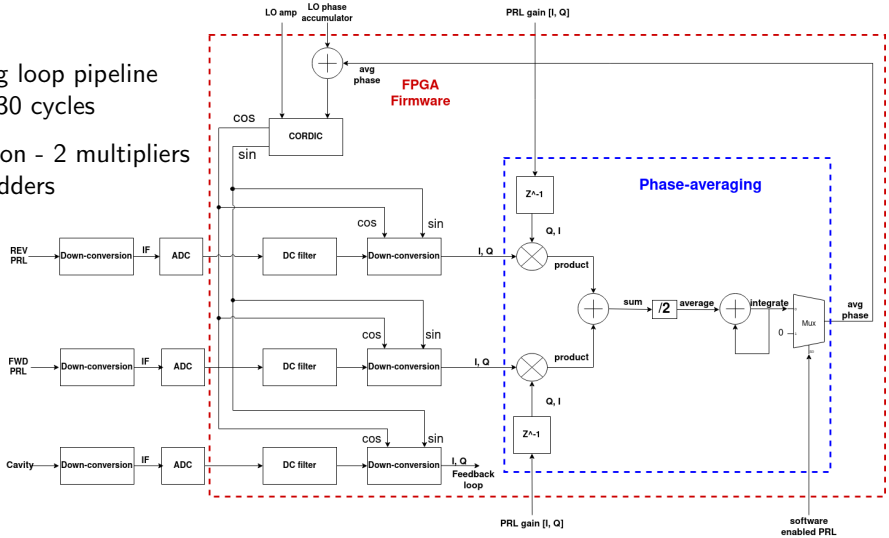

Cavity Phase Measurement Firmware

- 4 PRL gain values (I, Q or amplitude, phase)
- Calcuated based on desired tracking bandwidth (about 10 kHz), nominal phase offset, actual phase offset, forward and reverse PRL signal strengths
- Suffers from inherent π ambiguity (divider state) - fix by holding a pre-defined historical state in software - Nominal phase offset
- Actual phase offset - final offset, subtracted from forward and added to reverse
- Setup for LO+L1+LH and L2 sections of Linac
- L3 - same firmware, locks to forward reference only

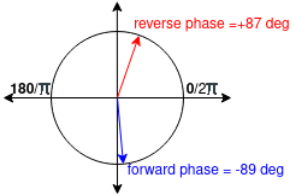

(forward phase - reverse phase)/2 = (-89 - 87)/2 = -88 deg
or (-89 - 87)/2 = -88 + 180 = 92 deg

rotate forward by either +88 or -92 deg rotate reverse by either -88 or +92 deg

resulting average phase of -1 or +179 deg

Commissioning

- Commissioning of the LCLS-II SRF system is currently ongoing at SLAC
- Firmware+software enhancements while testing on the real PRL cables
- Systematic rack checkout - overnight LLRF rack reboots/self-tests

Performance

- LLRF chassis installed in MO rack - monitor upstream and downstream PRL signals for out-of-loop measurement
- Jitter between two reference lines $< 0.0073^\circ$ rms between 0.1 Hz and 5.6 kHz

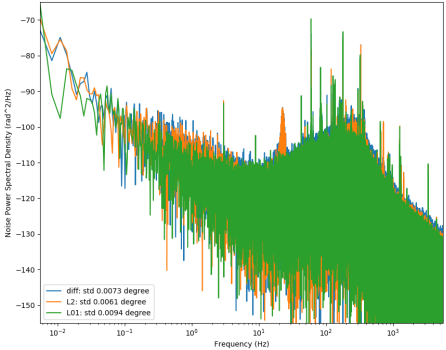

(a) Phase noise power spectral density

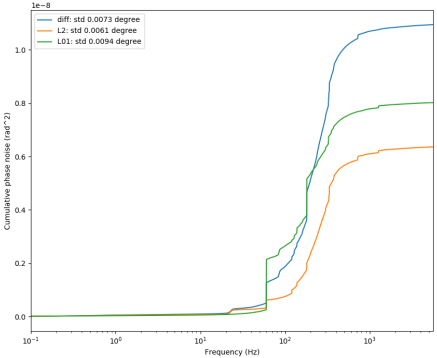

(b) Cumulative phase noise plot

Performance

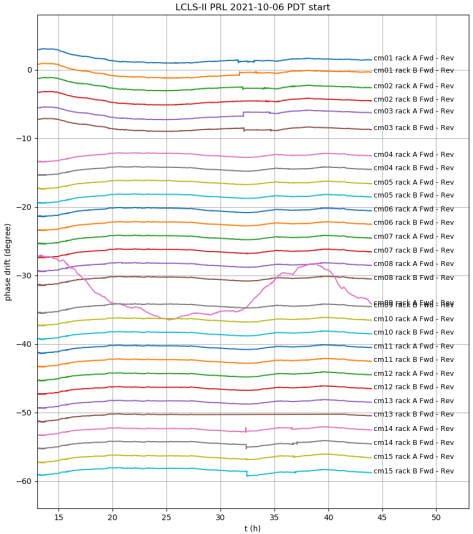

(a) Phase drift of cables over 44 hours

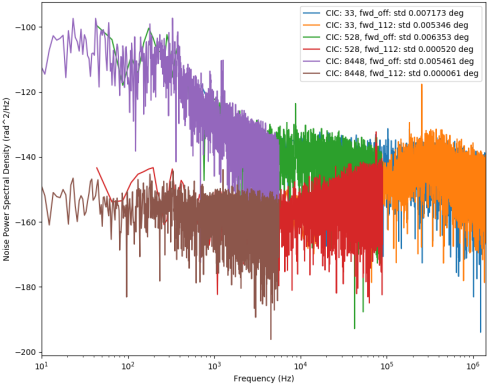

(b) Noise spectrum of tracking loop (open and closed-loop)

Summary and Conclusions

- Out-of-loop jitter between of the two reference lines: $< 0.0073^\circ$ rms
- At low frequencies closed-loop noise (in-loop error) approaches the noise floor of the DSP: $<$-150 dBrad^2/Hz
- Phase drift of the PRL cables over a long period: $< 2^\circ$ span
- Full out-of-loop measurement possible later in commissioning when the phase noise of the beam relative to cavities can be measured

Thank you for your attention!