FLASH2020+ RF Reference Generation System Upgrade Status.

New designs of Master Oscillator, Distribution Module and Frequency Conversion Modules

Maciej Urbański, Bartosz Gąsowski, Krzysztof Czuba, Bartłomiej Kola,
Paweł Jatczak, Tomasz Owczarek, Andžej Šerlat,
Institute of Electronic Systems, Warsaw University of Technology, Poland

Julien Branlard, Daniel Kühn, Frank Ludwig, Heinrich Pryschelski, Katharina Schulz
Deutsches Elektronen-Synchrotron DESY, Germany

Low Level RF Workshop 2022
Brugg-Windisch
11.10.2022
Contribution ID 45

FLASH2020+ upgrade program.

- Mentioned yesterday by Julien Branlard
- Upgrade of two cavities to increase power to 1.35 GeV
- Replacement of FLASH1 line undulators with variable gap ones
- 1 year shutdown
- A (seized) opportunity to redesign and upgrade the FLASH RF reference generation system

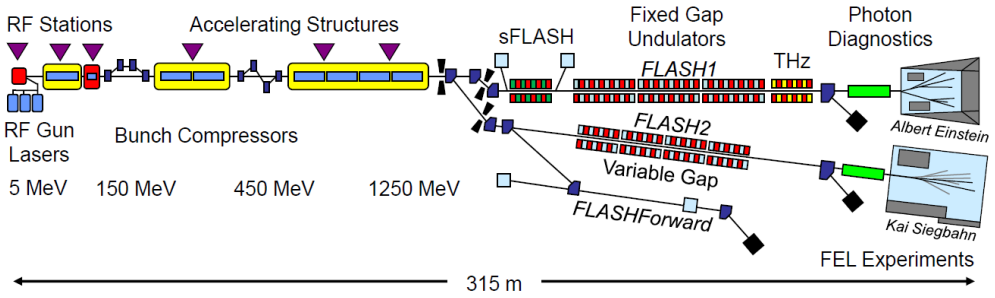

Specification and requirements for the new FLASH MO system.

- XFEL modules are very good and proved in action modules
- The complexity level is hovewer very significant
- Therefore the goal was to further improve existing designs, both performance and complexity

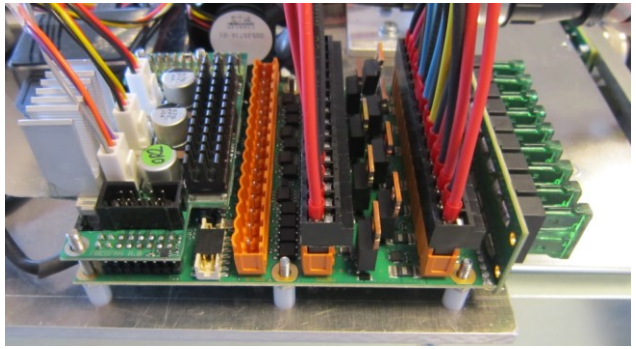

DESY FRED power management board

DESY TMCB monitoring and control board

Up: E-XFEL Master Oscillator inside
Down: E-XFEL Distribution unit inside

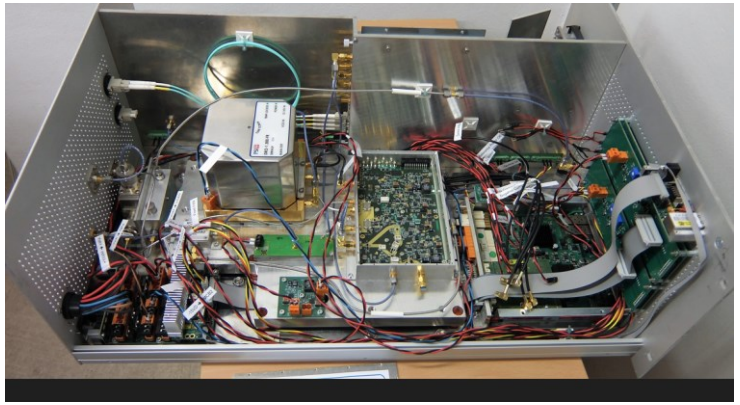

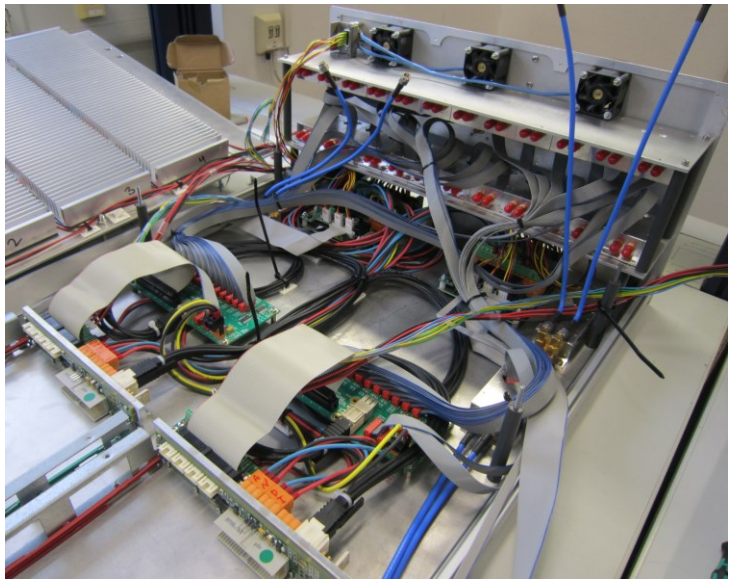

E-XFEL MO 100 MHz synthesizer unit, an example of E-XFEL like 19” module

The upgraded FLASH RF Generation System.

General structure

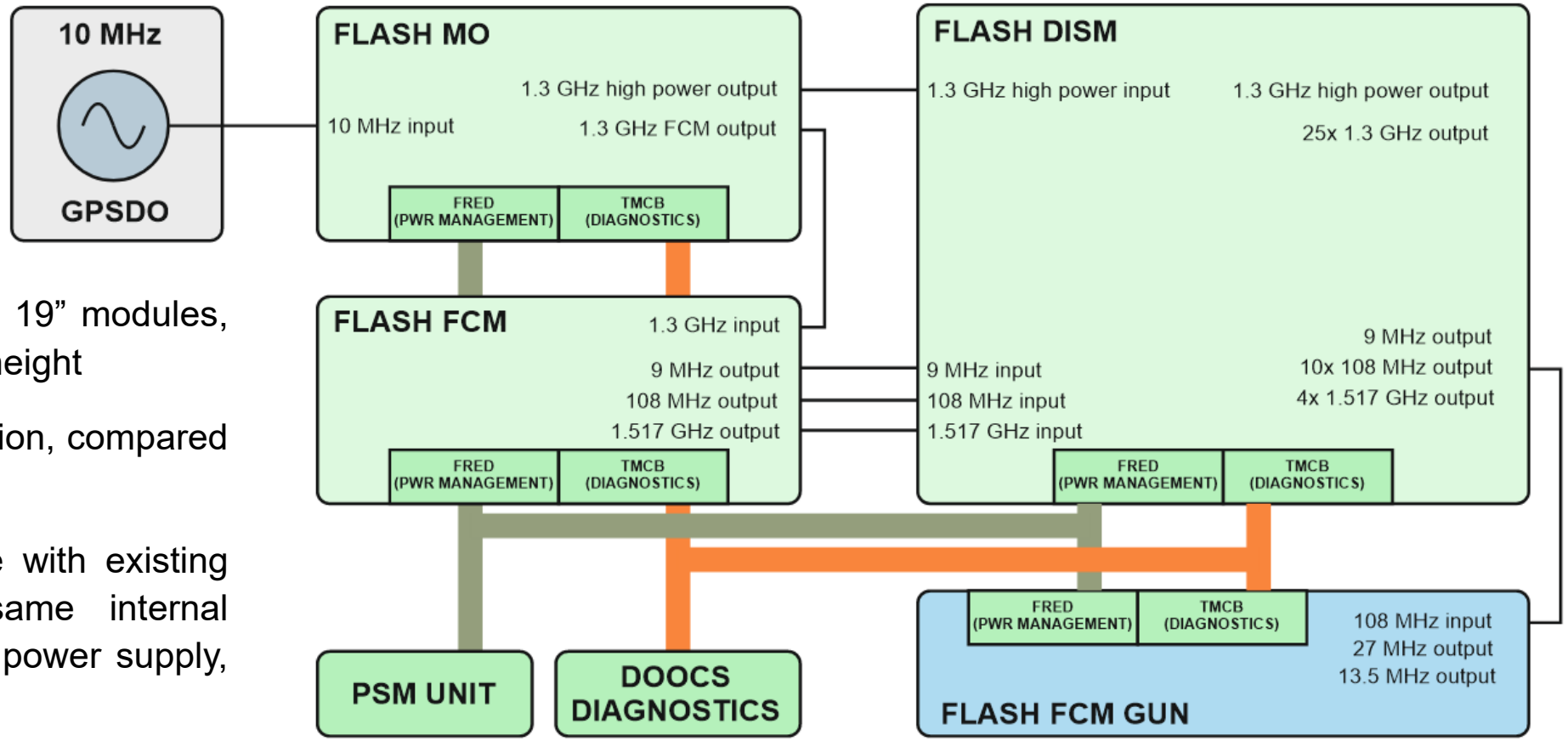

- System components as 19” modules, 600 mm deep, 3 to 5U height
- A significant size reduction, compared to old design
- Design fully compatible with existing E-XFEL devices – same internal control modules, same power supply, same monitoring
- Control and diagnostics compatible with DESY DOOCS system

The upgraded FLASH RF Generation System.

FLASH MO 19” module – FL-MO1300

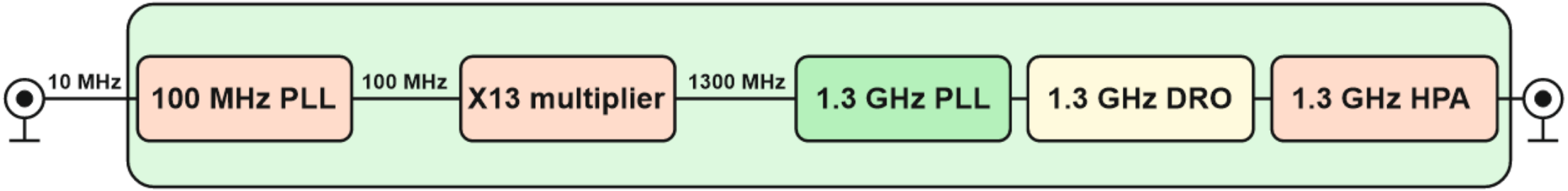

- Design structure compatible with E-XFEL MO concept, updated by:
  - New 1.3 GHz DRO, old XFEL MO DROs no longer available
  - 100 MHz PLL from E-XFEL MO, new X13 multiplier, new 1.3 GHz high power amplifier
  - New 1.3 GHz PLL design to drive the DRO
- 1.3 GHz signal generation only, other frequencies synthesized in other 19” modules
- Completely new mechanical concept and design
- **Overall phase noise results better than in E-XFEL MO**
  - Up to 15 dB improvement in range from 1 kHz to 100 kHz offsets, above 100 kHz the main limitation is the HPA

The upgraded FLASH RF Generation System.

FLASH MO 19” module – FL-MO1300 – mechanics and serviceability

- Custom designed 19” 600 mm 5U housing, divided into high power part and highly-sensitive part
- Significant use of 3D printed parts – air collectors for fans, thermal insulator for DRO
- Design focused on simplicity, robustness and ease of service

FLASH MO assembly manual (simplified…)

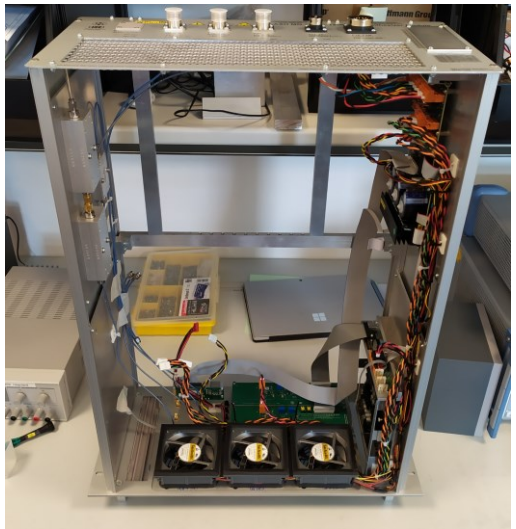

+

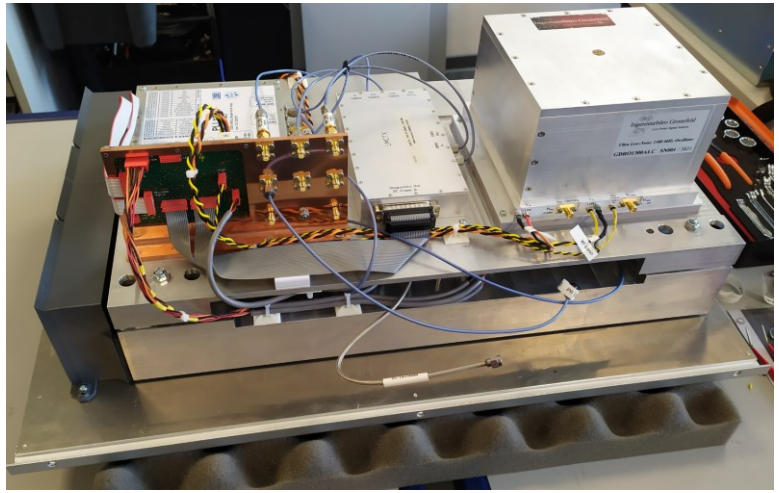

=

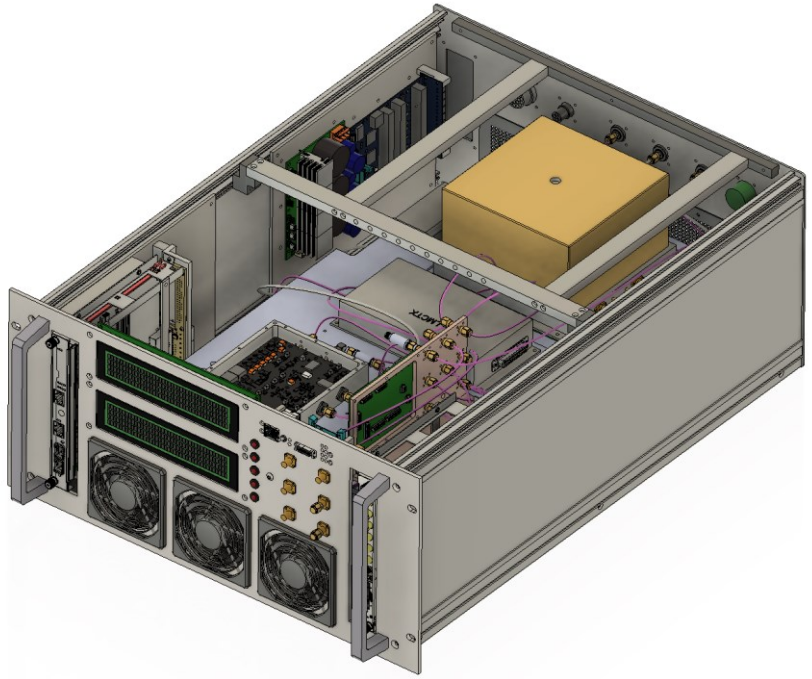

The upgraded FLASH RF Generation System.

FLASH MO 19” module – FL-MO1300 – thermal management, vibrations and air flow control

- Design optimized for maximum vibration reduction:
  - Massive heatsink as base for anti-vibration plate
  - Fans equipped with anti-vibration rubber dumpers and custom 3D printed holders
- Thermal management:
  - Separate heatsinks for HPA and DRO
  - Custom 3D printed DRO insulation
- Air flow control:
  - Separate compartment for air flow
  - Custom 3D printed air collector for fans

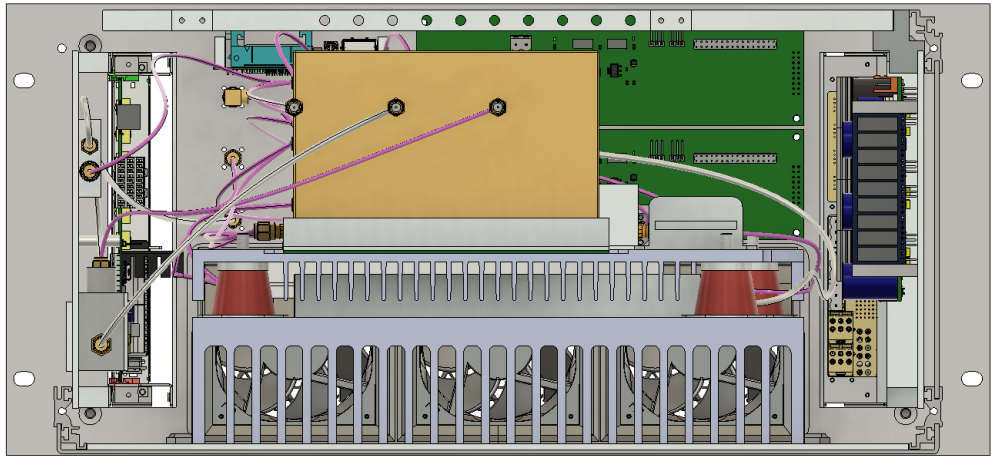

FLASH FL-MO1300 rear view, without rear panel

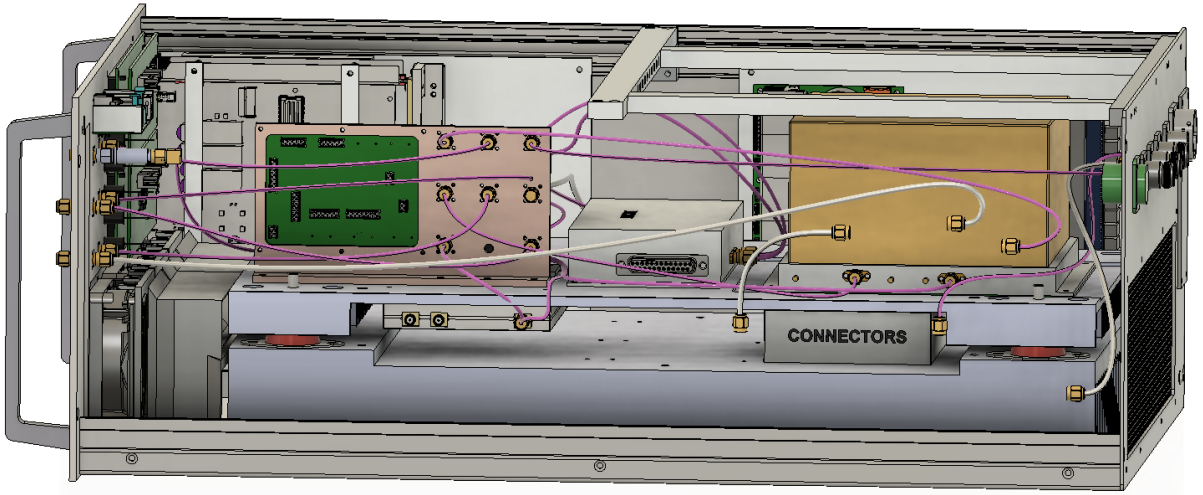

FLASH FL-MO1300 side view

The upgraded FLASH RF Generation System.

FLASH 19” Distribution Module – FL-DISM 9 108 1300 1517 MHz

- Based on custom designed power splitting units:
  - Size reduction
  - Internal cabling reduction
- Diagnostics implemented within power splitting units
- Thermal stabilization foreseen in design, as future upgrade

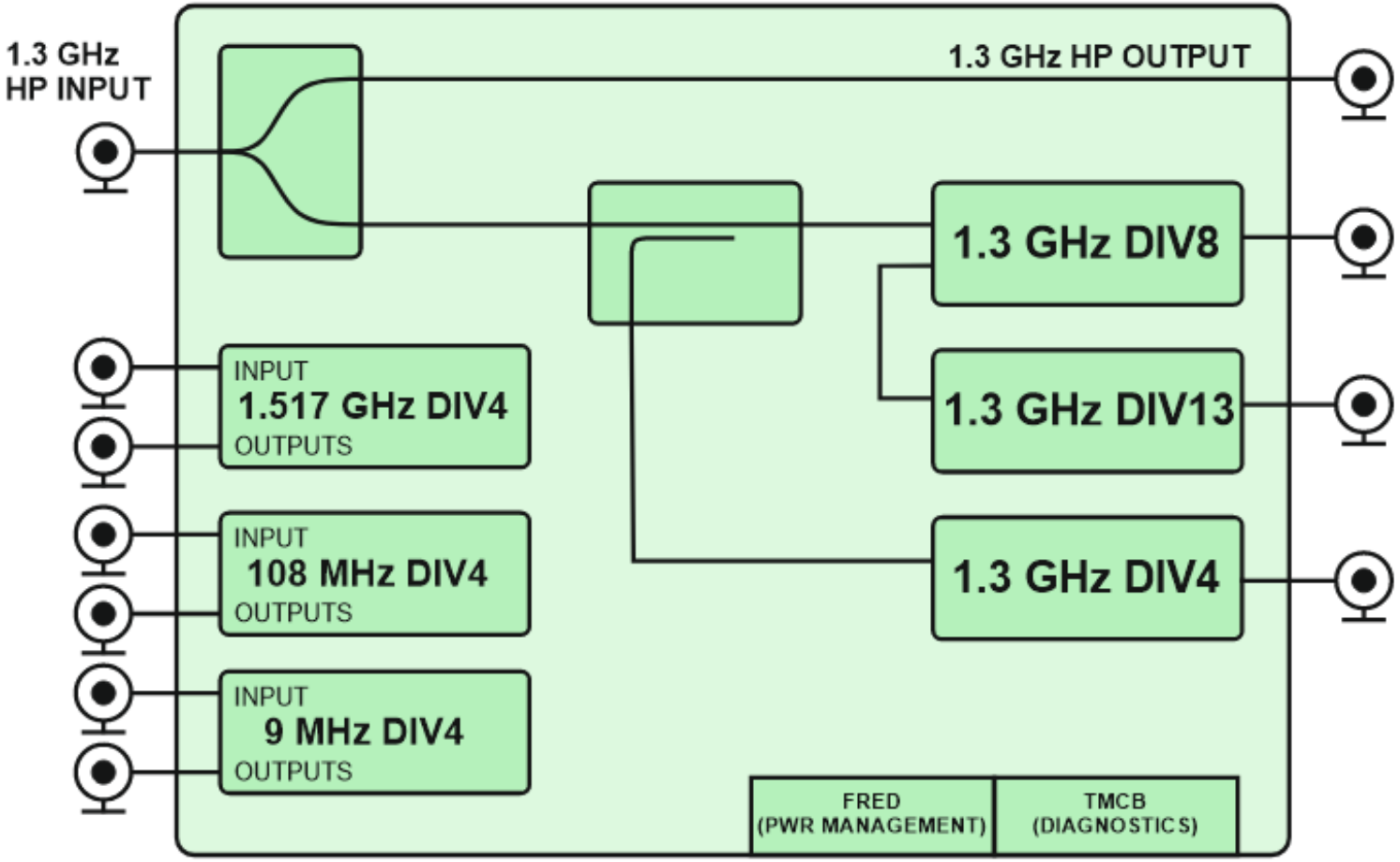

The upgraded FLASH RF Generation System.

FLASH 19” Distribution Module – mechanics

- 5U 600 mm 19” module
- Over 40 RF outputs at both front and rear panels
- All diagnostics at the bottom part, all the RF easily accesed from top

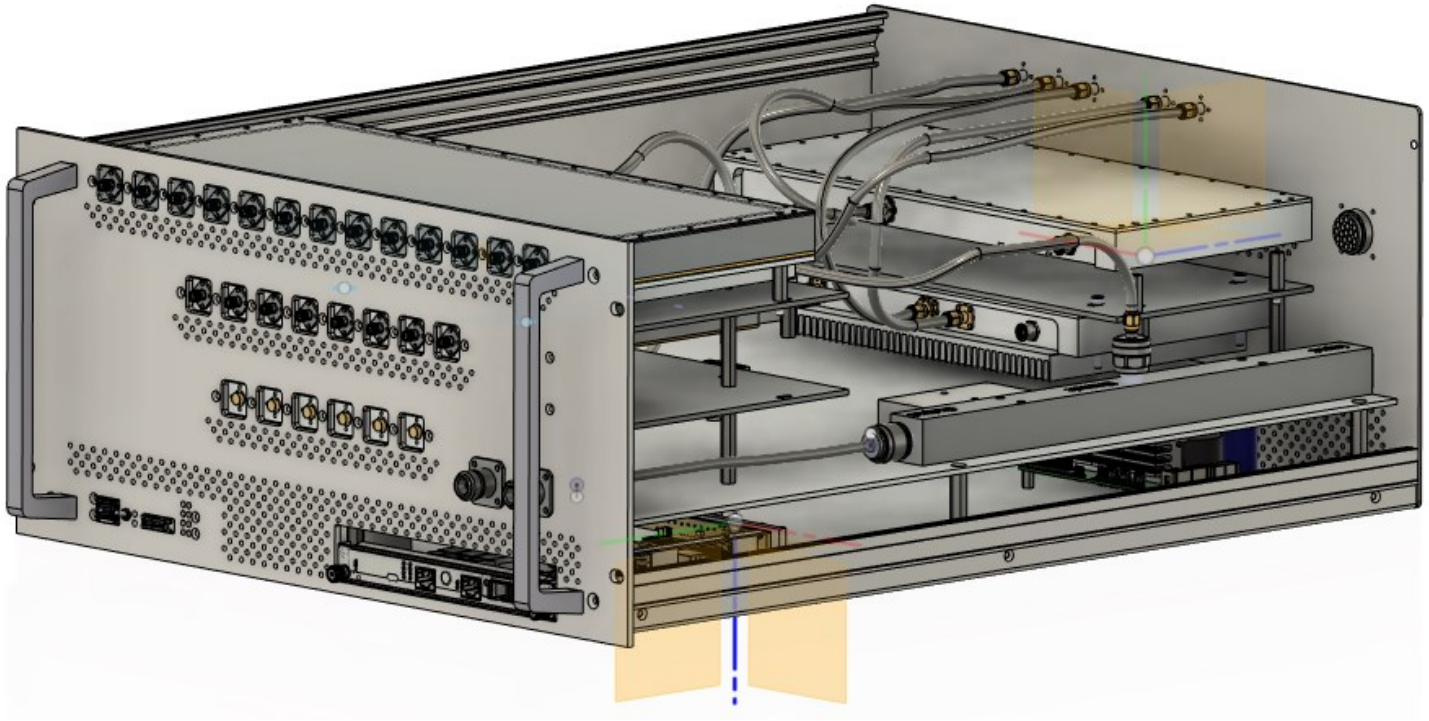

FLASH FL-DISM inside view

The upgraded FLASH RF Generation System.

FLASH 19” Distribution Module – internal modules

- Custom design of multi-channel, high power capable power splitters:
  - Excellent transmission loss and return loss
- Compact structure:
  - Designed and compatible with thermal stabilization upgrade
  - All the diagnostics components embedded within the modules
- Modules mounted directly on box panels, to reduce internal cabling

The upgraded FLASH RF Generation System.

FLASH 19” Frequency Conversion Module – FL-FCM

- Based on custom frequency divider modules (upgraded version of E-XFEL frequency dividers)
- 108 MHz and 1.517 GHz signals synthesized by a custom, dual PLL module
- Amplified signals routed back to DISM module and then to the end-users

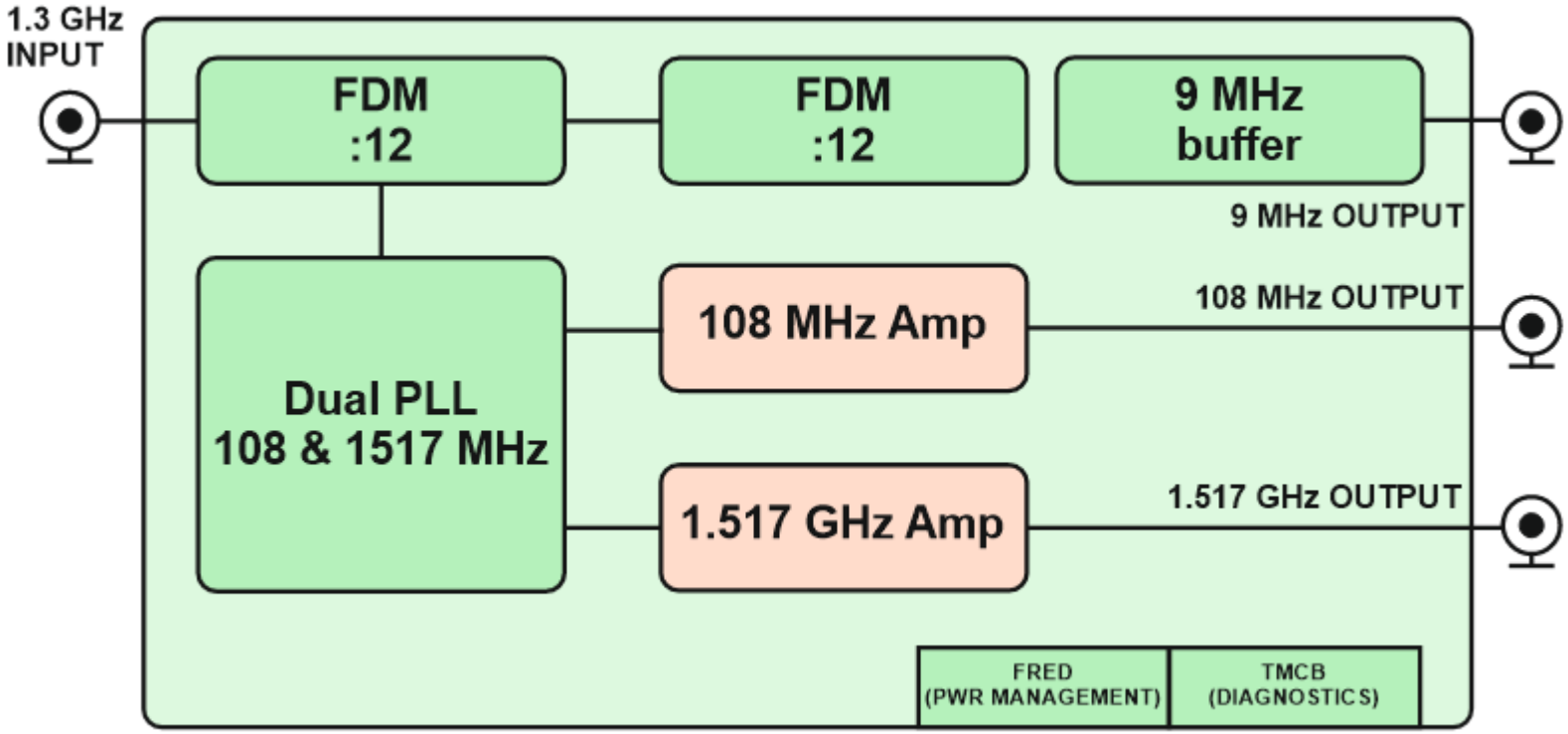

The upgraded FLASH RF Generation System.

FLASH 19” Frequency Conversion Module – mechanics

- 3U 600 mm 19” module

- Two sections:
  - high power – amplifiers
  - low power – the rest

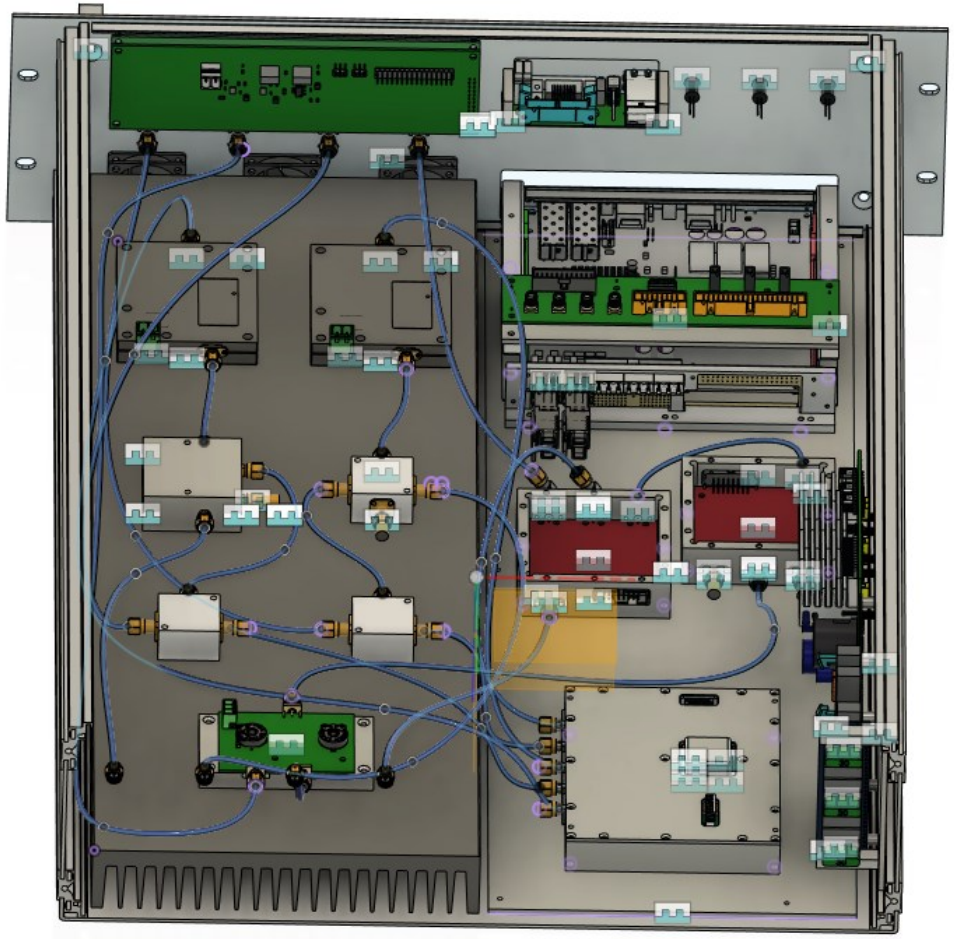

Up: FLASH FL-FCM top-rear view, without rear panel
Left: FLASH FL-FCM front view, assembled

The upgraded FLASH RF Generation System.

FLASH 19” Frequency Conversion Module – internal modules

- Dual PLL module:
  - 108 MHz OCXO based
  - Designed to reduce vibration impact on the OCXO
  - Custom 3D printed fixture for DRO
- Frequency Divider Module (FDM):
  - Upgraded E-XFEL solution
  - Compact size
  - Completely disabled under no input signal
- Custom made, 3rd party power amplifiers for 108 MHz and 1.517 GHz

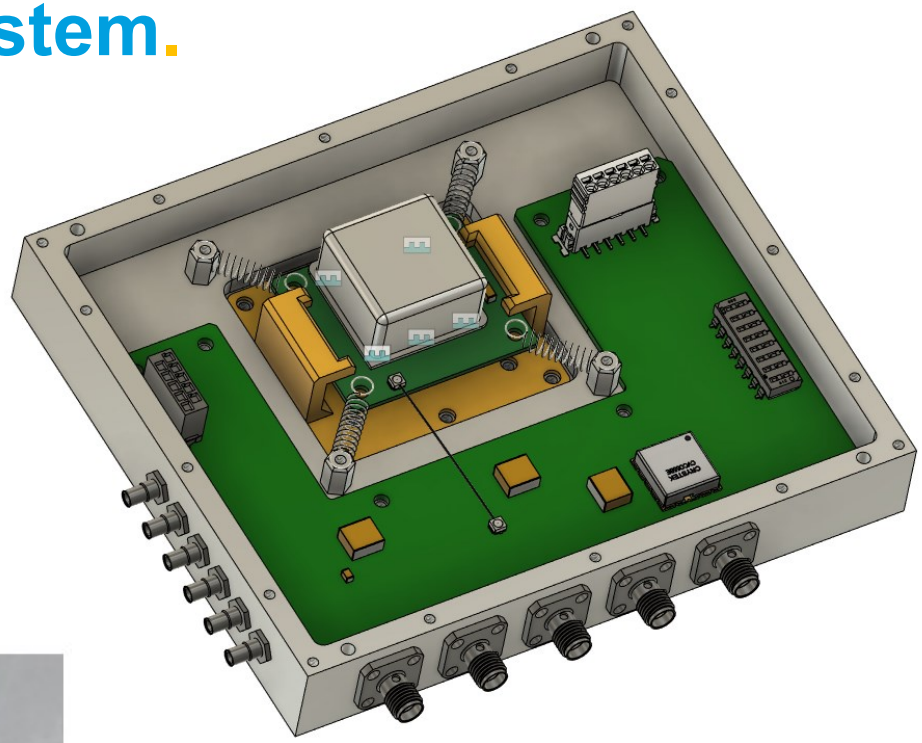

FL-FCM Dual PLL module, without top cover

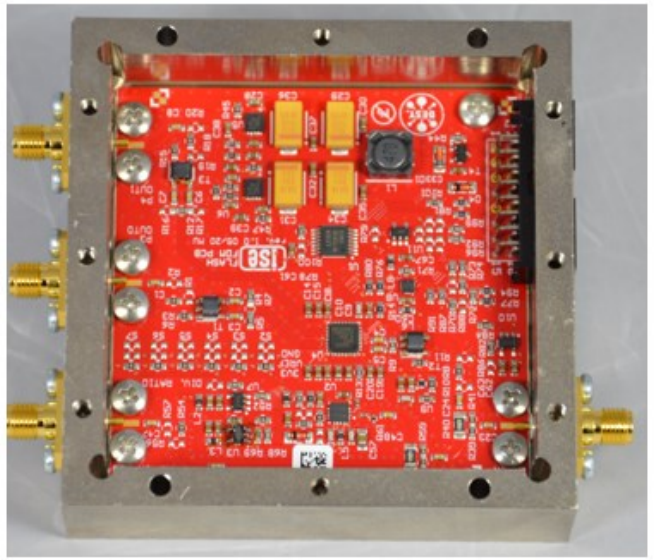

FL-FCM FDM module, without top cover

The upgraded FLASH RF Generation System.

First test results – FL-MO 1.3 GHz output signal phase noise

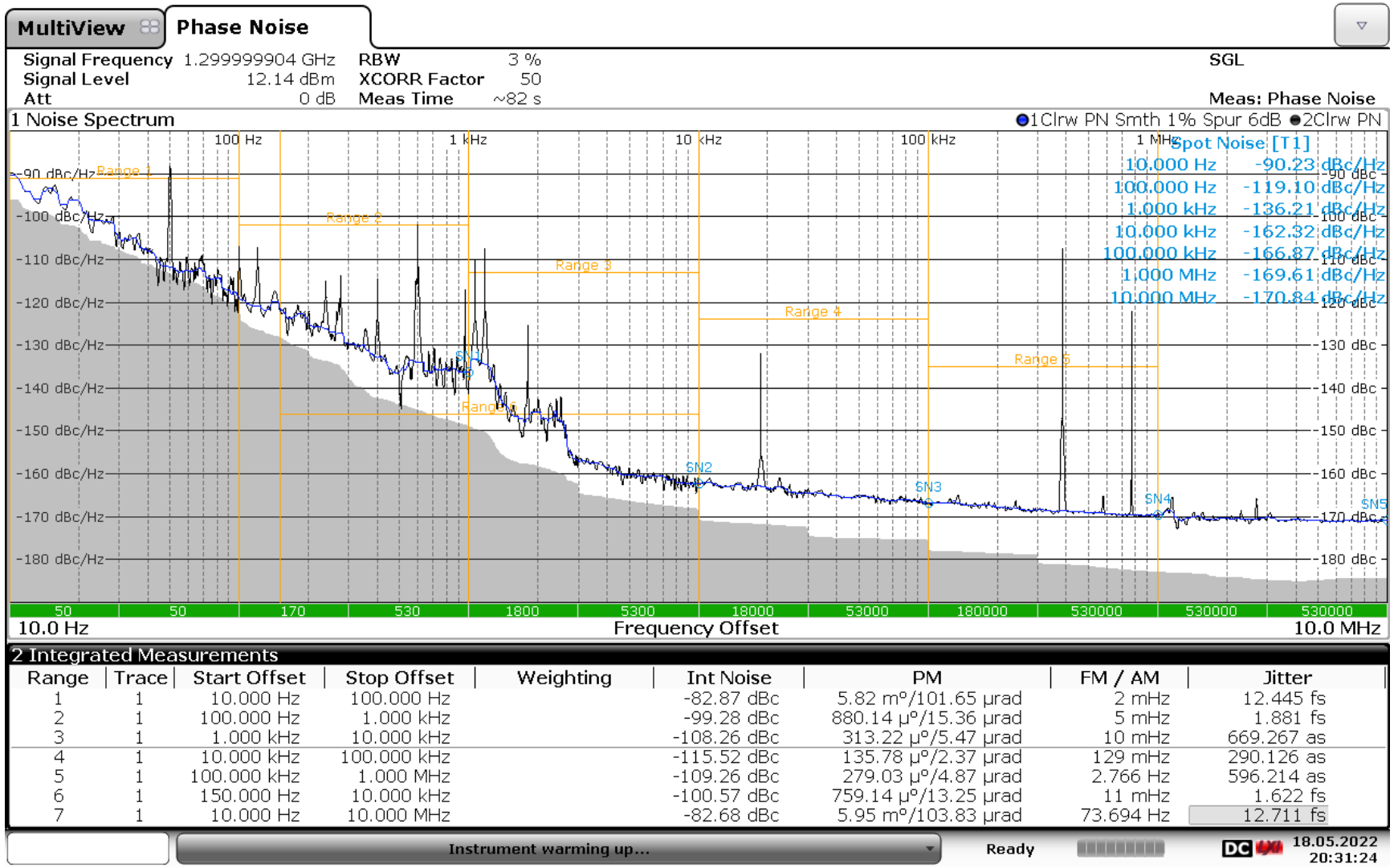

20:31:25 18.05.2022

The upgraded FLASH RF Generation System.

First test results – FL-FCM 108 MHz signal phase noise

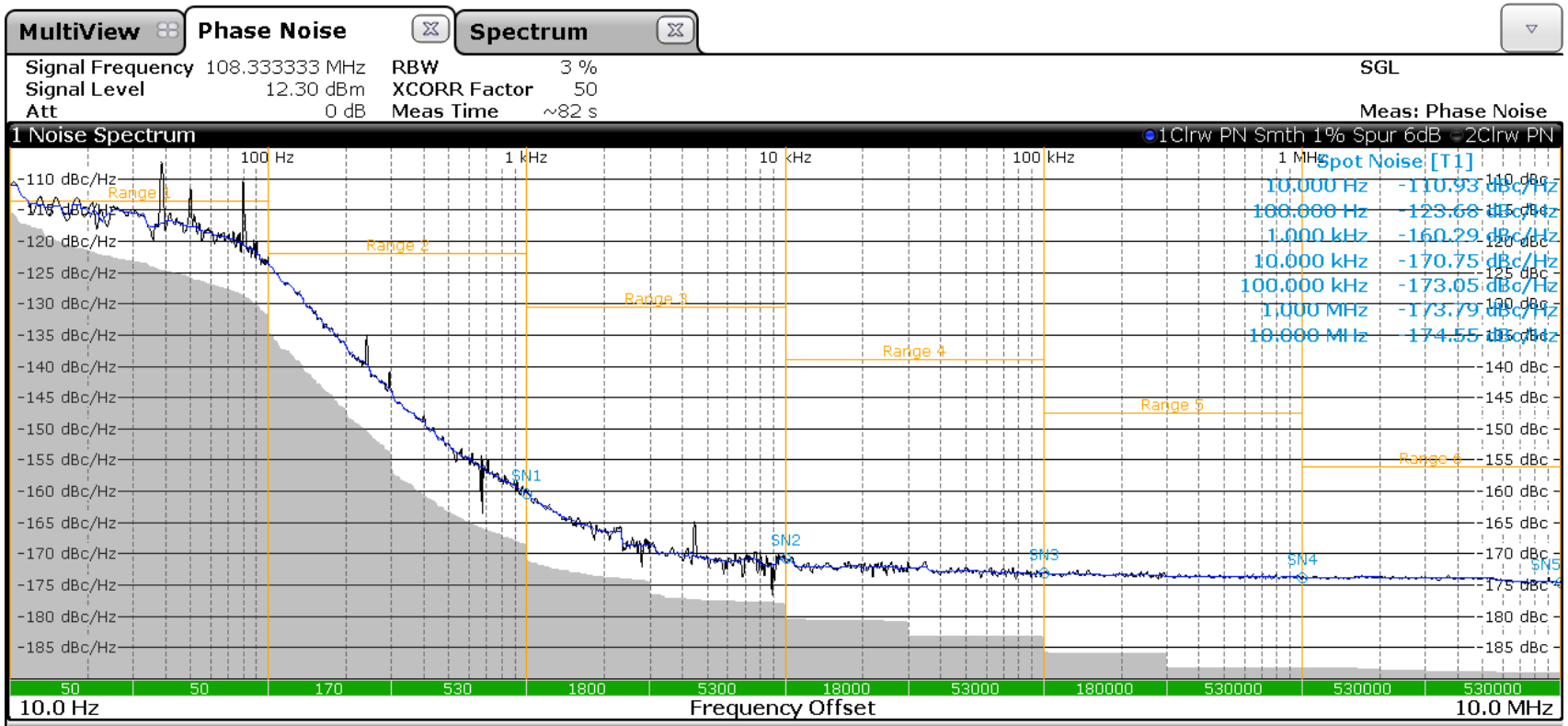

Range	Trace	Start Offset	Stop Offset	Weighting	Int Noise	PM	FM / AM	Jitter
1	2	10.000 Hz	100.000 Hz		-97.21 dBc	1.12 m°/19.50 µrad	940 µHz	28.648 fs
2	2	100.000 Hz	1.000 kHz		-108.88 dBc	291.51 µ°/5.09 µrad	830 µHz	7.475 fs
3	2	1.000 kHz	10.000 kHz		-129.33 dBc	27.69 µ°/483.34 nrad	2 mHz	710.088 as
4	2	10.000 kHz	100.000 kHz		-123.11 dBc	56.63 µ°/988.44 nrad	58 mHz	1.452 fs
5	2	100.000 kHz	1.000 MHz		-114.03 dBc	161.05 µ°/2.81 µrad	1.691 Hz	4.130 fs
6	2	1.000 MHz	10.000 MHz		-104.56 dBc	479.47 µ°/8.37 µrad	49.686 Hz	12.294 fs
7	2	10.000 Hz	10.000 MHz		-96.15 dBc	1.26 m°/22.03 µrad	49.715 Hz	32.364 fs

20:16:30 23.06.2022

The upgraded FLASH RF Generation System.

First test results – FL-DISM modules matching & transmission

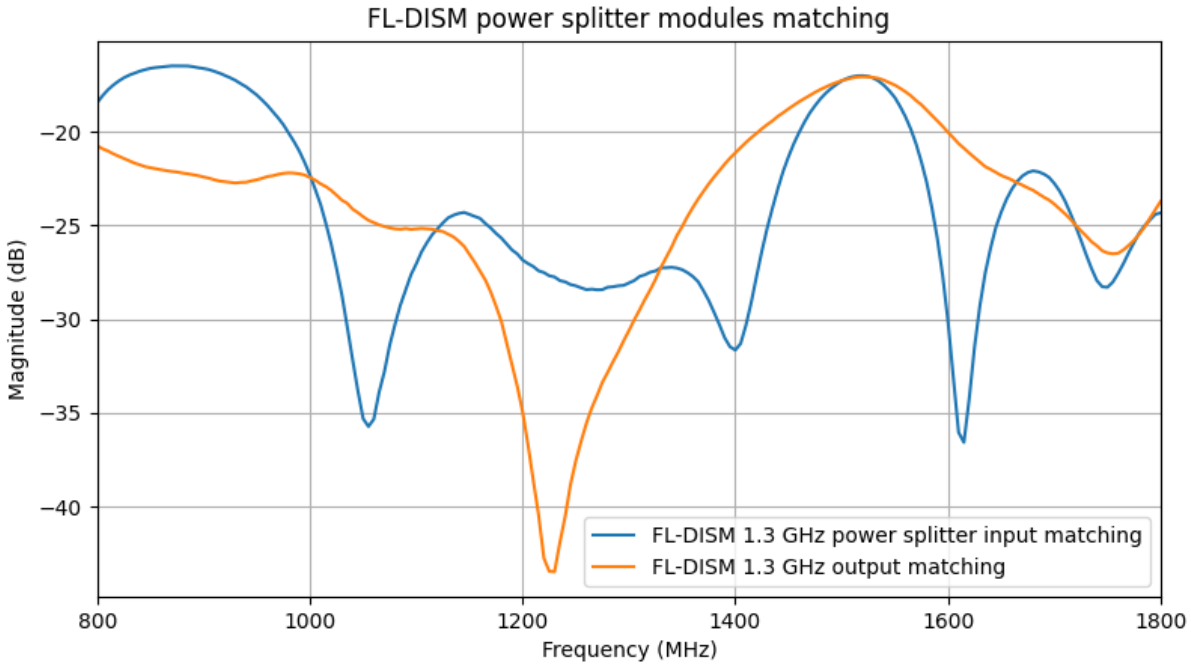

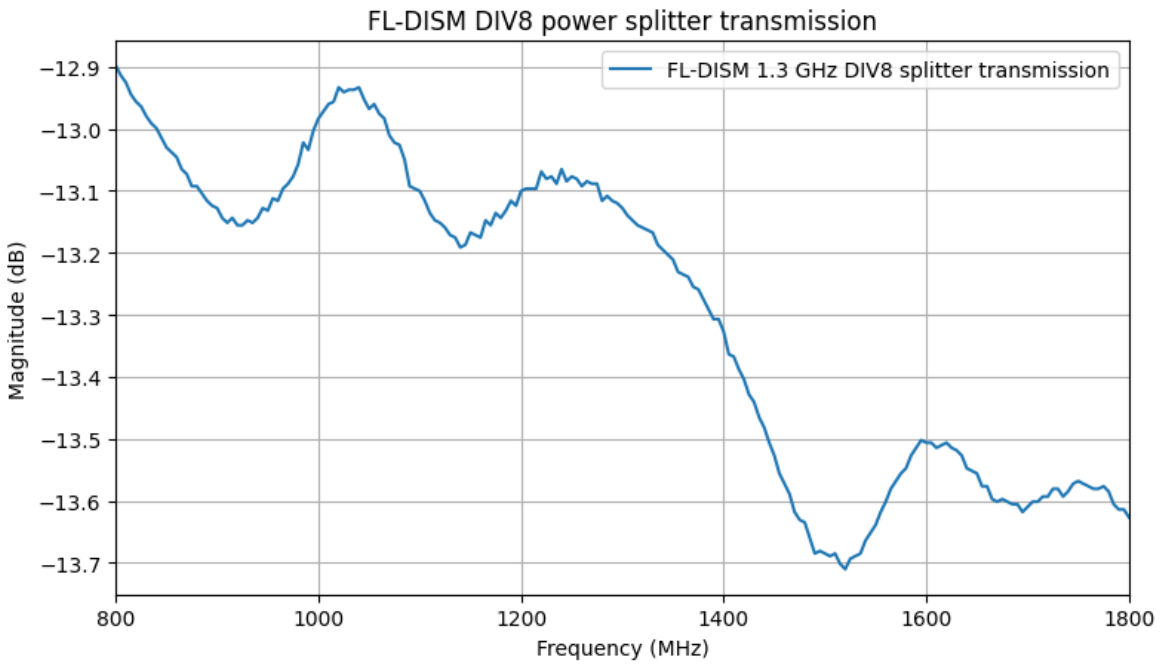

The upgraded FLASH RF Generation System.

Diagnostics development and testing

- Basic diagnostics, like in E-XFEL, available via LCD screens in the modules
- Fully compatible with DESY DOOCS system
- Designed in parallel to electronics and mechanics
- COVID did not stop that:
  - Hardware assembled and tested in Warsaw
  - Diagnostics developed remotely in DESY

```
-----------------------------------------
ADC1 CH DIV_OUT PANEL DESC      VALUE READ
CH 0    RET1    P22            0.82
CH 1    FWD1    P22            0.93
CH 2    RET2    P23            0.83
CH 3    FWD2    P23            0.94
CH 4    RET3    P24            0.83
CH 5    FWD3    P24            0.98
CH 6    RET4    P25            0.83
CH 7    FWD4    P25            0.98
CH 8    HUM     XX             0.45
CH 9    TEMP    XX             0.71
CH10    XX      XX             1.02
CH11    XX      XX             1.02
CH12    XX      XX             1.02
CH13    XX      XX             1.02
CH14    XX      XX             1.02
CH15    XX      XX             1.02
ADC1 Temperature : 20.07 deg C
Temp and Hum Sensor HDC
Temp:   24.56
Hum:    4.76
```

Thank you

Contact

Institute of Electronic Systems
Warsaw University of Technology

Maciej Urbański
ISE WUT
maciej.urbanski@pw.edu.pl