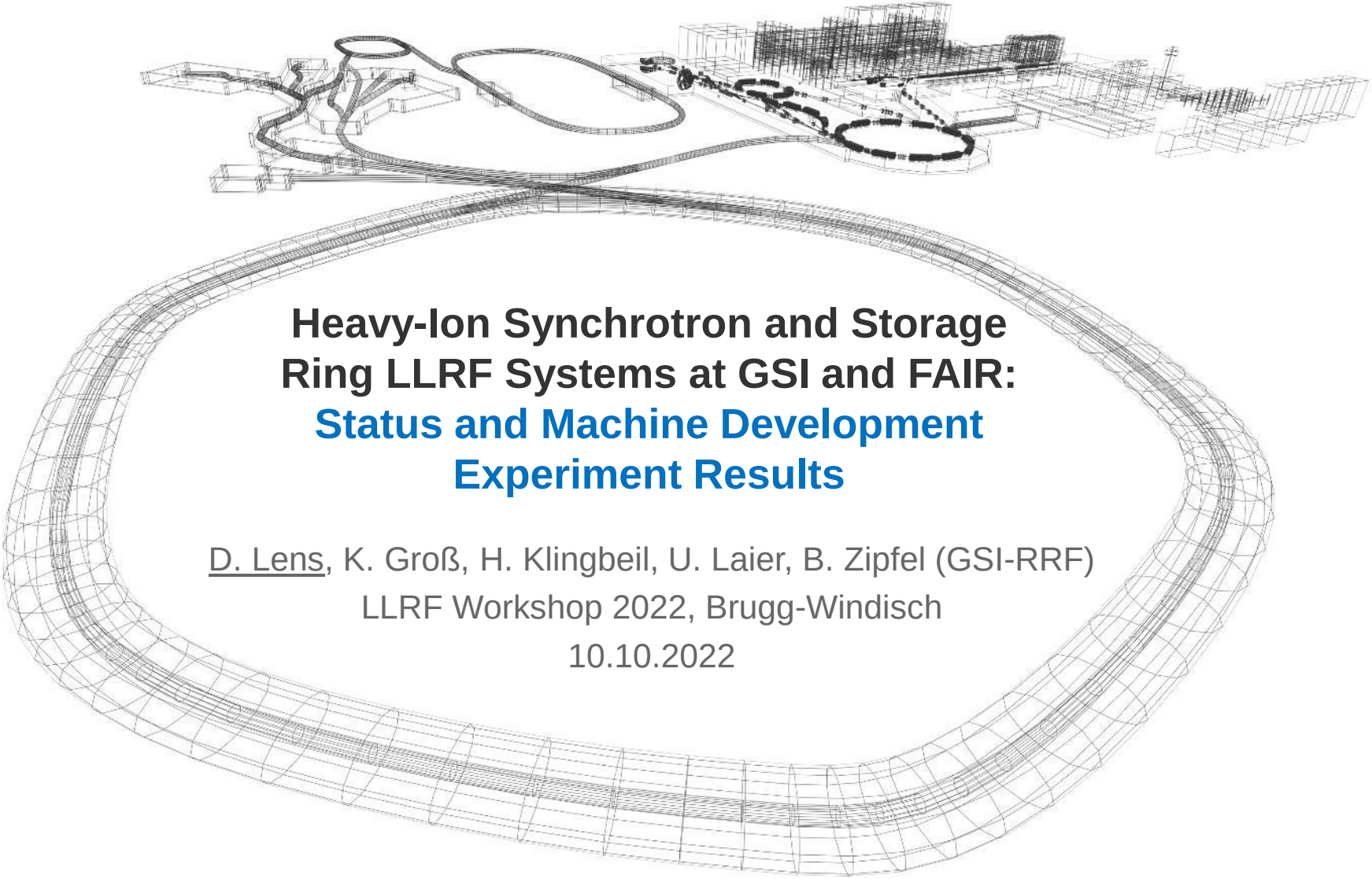

Heavy-Ion Synchrotron and Storage Ring LLRF Systems at GSI and FAIR: Status and Machine Development Experiment Results

D. Lens, K. Groß, H. Klingbeil, U. Laier, B. Zipfel (GSI-RRF)

LLRF Workshop 2022, Brugg-Windisch

10.10.2022

GSI & FAIR Synchrotron and Storage Rings

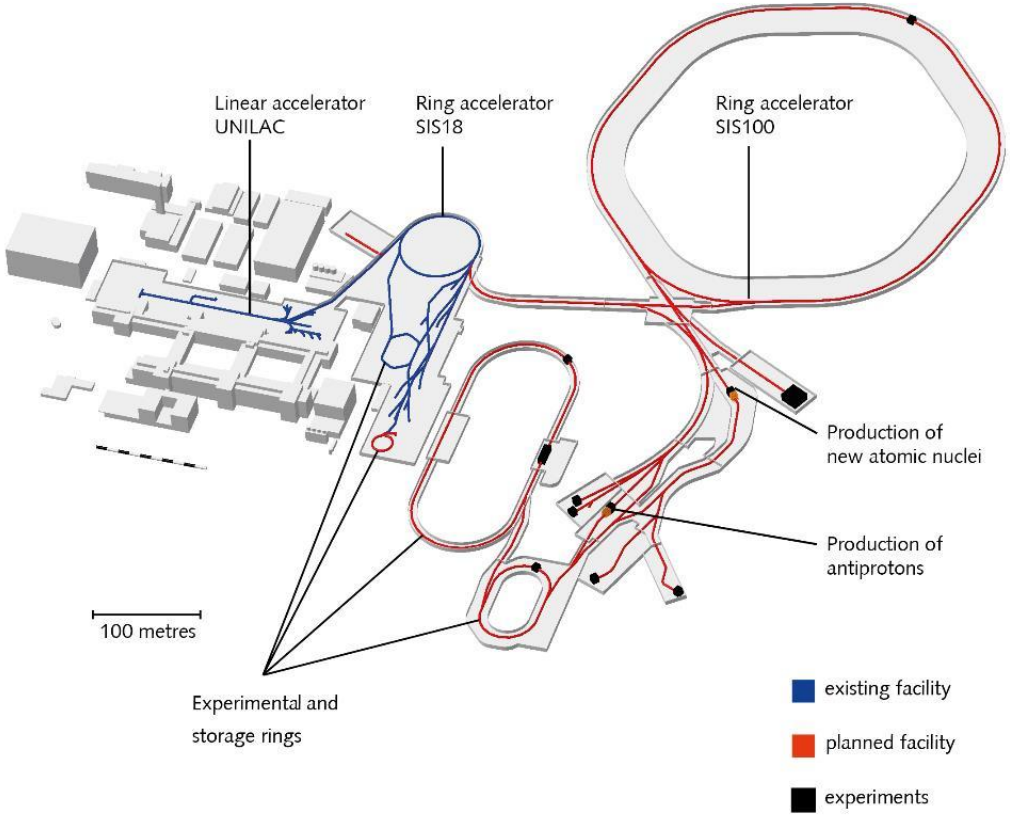

GSI/FAIR

Heavy-ion synchrotrons:

- SIS18 (upgrade)
- SIS100

Storage rings:

- ESR (upgrade)
- CRYRING (upgrade)
- Collector Ring CR
- High-energy storage ring HESR

FAIR Construction Site

July 2022

Photo: M. Konradt/GSI/FAIR

Ring RF Systems for FAIR (without HESR)

Ring	RF System	Frequency Range [MHz]	Voltage per Cavity [kV]	Duty Cycle	Length	Qty
SIS18 Upgrade	Ferrite cavities, h=4 Accel. h=2 (MA) Bunch Compression	0.85 … 5.5 0.43 … 2.8 0.8 … 1.2	16 13.3 40	100% 100% 0.05%	3 m 1.2 m ≈ 1 m	2 3 1
SIS100	Accel. h=10 (Ferrite) Bunch Compression Barrier Bucket Long. Feedback	1.1 … 3.2 0.310 … 0.560 Broadband Broadband	20 40 2 x 15 12 ... 15	100% 0.05% 20% 100%	3.0 m 1.2 m 1.1 m 1.1 m	14 9 2 2
CR	Debuncher (RIB, anti-protons, incl. bucket generation)	1.10 … 1.25 (1.50) (pbar)	Pulsed: 40 (21) CW: 2 (1.35) (pbar)	0.06%	1.125m	5
CRYRING	Existing Swedish system	0.135 … 2.4	0.15 … 0.35	100%	≈ 3 m	1
ESR	Ferrite cavity, h=2 Barrier Bucket	0.85 … 5.5 broadband	5 0.6 (2 pulses)	100% 50%	1.68 1.13	1 2 in 1

courtesy H. Klingbeil

FAIR RF Systems (Selection)

SIS100 Acceleration (RI Research Instruments GmbH)

SIS100 Bunch Compression (Aurion Anlagentechnik GmbH)

LLRF racks for one cavity system (cavity control, control system interface)

General LLRF Requirements

- Fast ramping rate, up to 10 MHz/s
- Large frequency span: revolution frequency at SIS18:
  215 kHz … 1.36 MHz
- LLRF accuracy under dynamic conditions:
  Amplitude ±6%, phase ±3°
- Light to heavy ions from $^{1}H^{+}$ to $^{238}U^{73+}$
- Large dynamic range of RF amplitude, up to 60 dB
- Several RF supply areas (SIS100: 5)
- Synchronization of different types of RF systems:
  CW, pulsed, broadband
- Multi-harmonic operation
- Beam feedback loops: Beam phase control, bunch-by-bunch longitudinal feedback

H. Klingbeil et al. PRSTAB 14, 102802 (2011)

LLRF Topology: Reference Signals

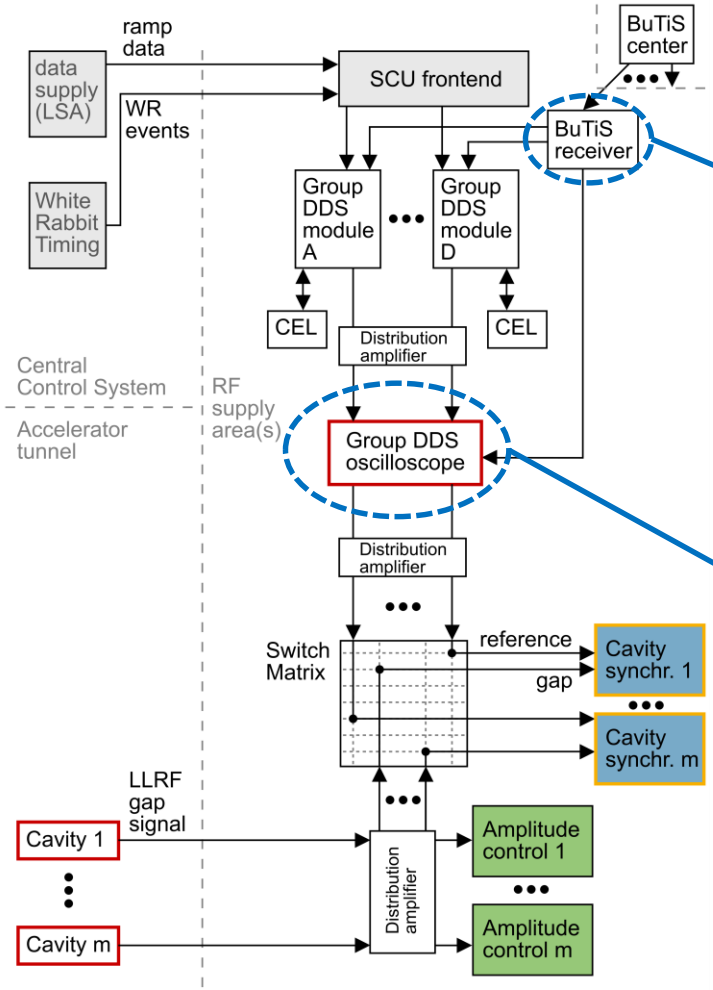

Bunch Phase Timing System (BuTiS)

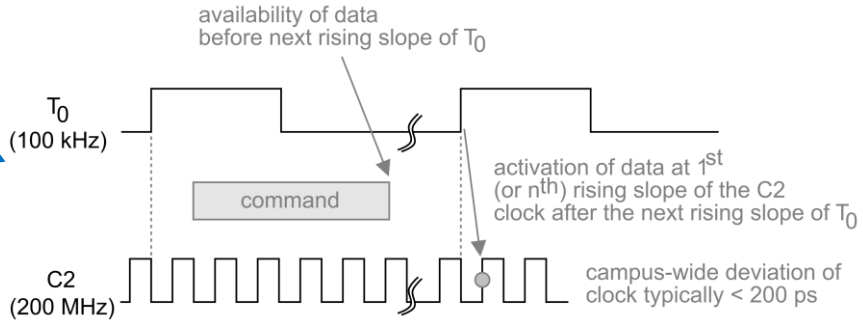

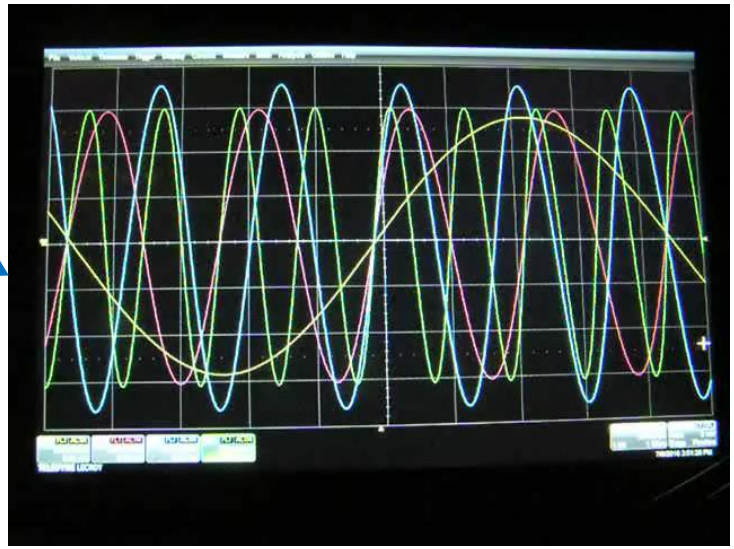

Equal signal transmission properties from gap & reference to cavity synchronization

Group DDS (h=1,4,5,8) signals using Calibration Electronics (CEL)

LLRF Module Examples (I)

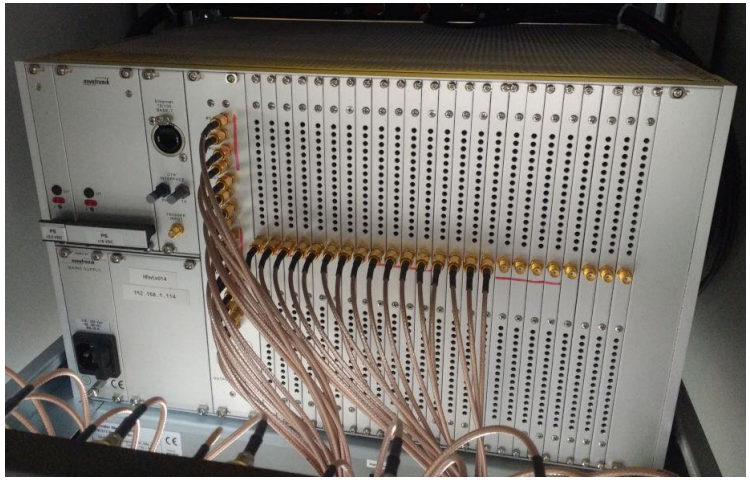

Switch Matrix (Novotronik Signal-verarbeitung und Systemtechnik GmbH)

BuTiS Receiver Station (GSI, WORK Microwave GmbH, PPM Vialite)

RF Distribution Amplifier (GSI)

DDS (GSI) with FPGA Interface Board FIB3 (KTS – Kommunikationstechnik und Systeme GmbH)

LLRF Topology: Cavity System

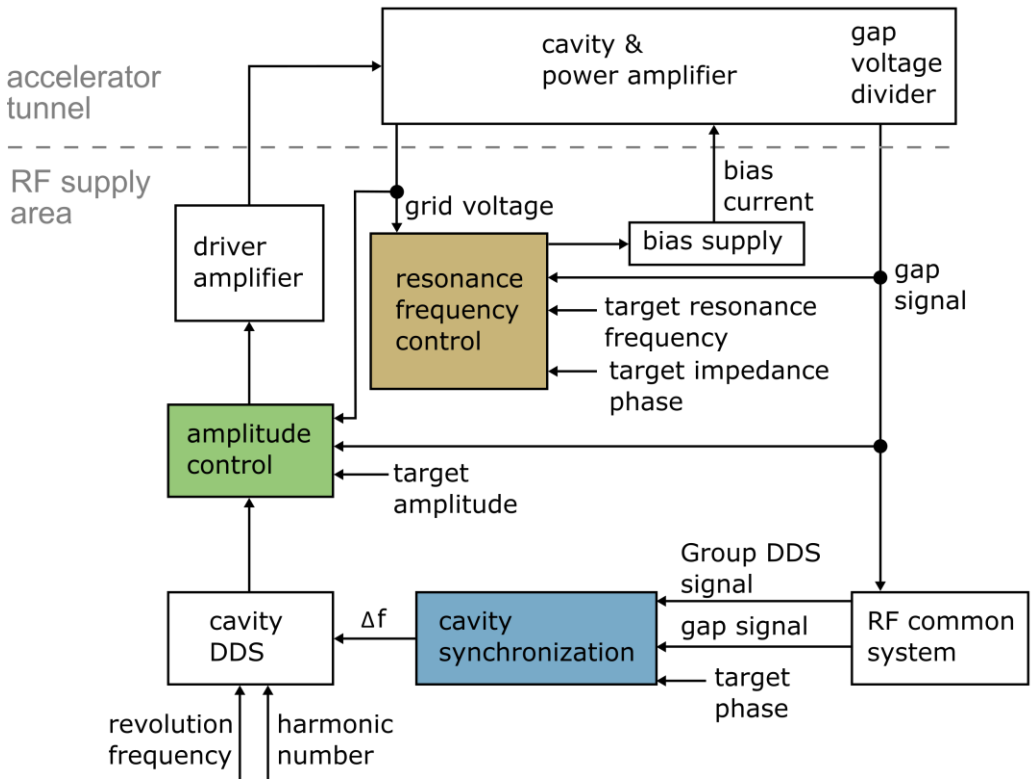

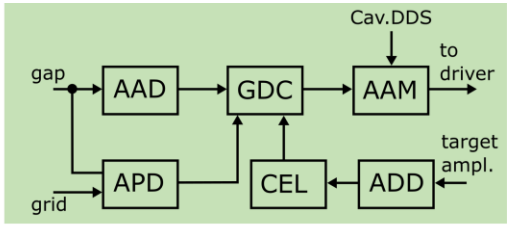

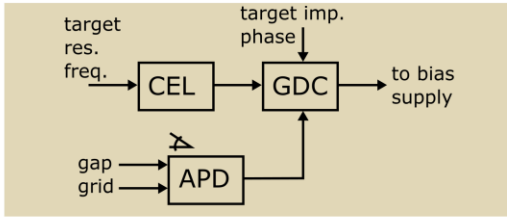

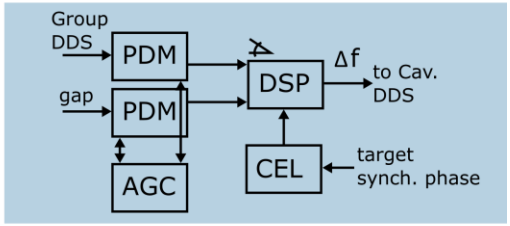

- Multiple use of modules and interfaces, e.g.:
  - Generic controller (GDC): Amplitude control, resonance frequency control, …
  - Calibration electronics (CEL): Calibration of phase & amplitude, feedforward, …
  - DSP: Cavity synchronization, beam phase control, longitudinal feedback

LLRF Module Examples (II)

Amplitude control crate (GSI)

CEL, calibration electronics (GSI)

DSP System (Sundance Multiprocessor Technology Ltd.)

DSP System Architecture

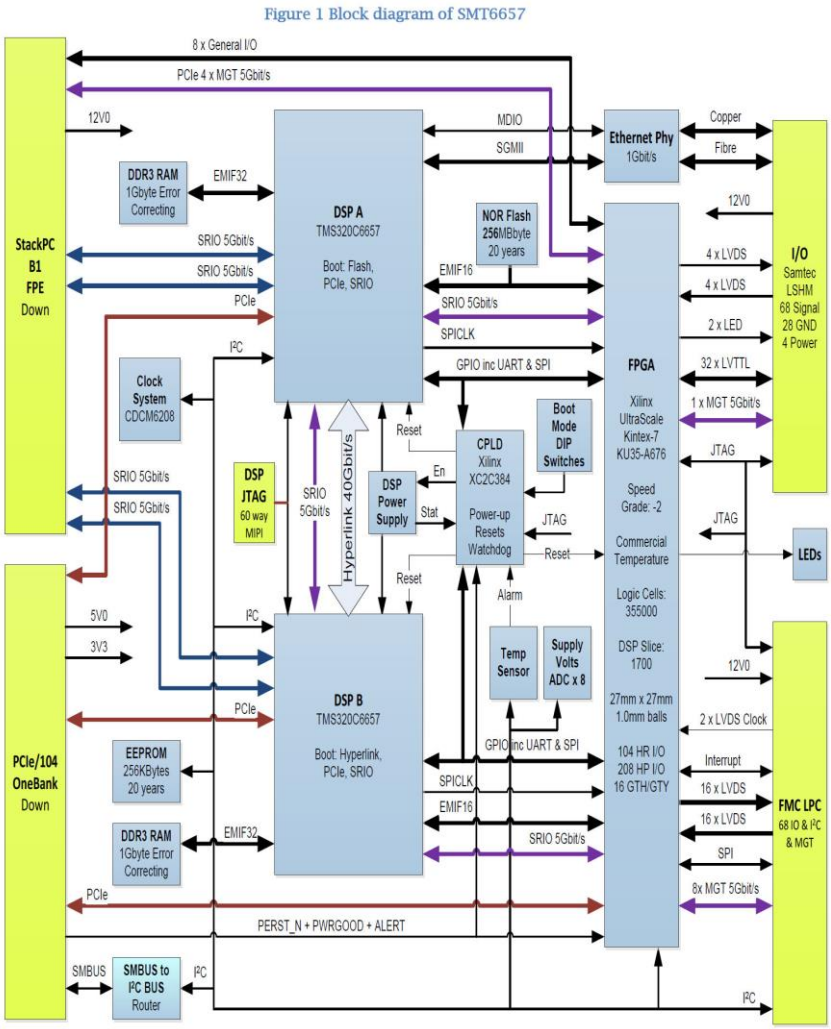

From: Design Description SMT6657, Sundance Ltd., 2018

System architecture of SMT-6657 (Sundance Multiprocessor Technology Ltd.)

- 2 DSPs (TI, 1.25 GHz)
- Xilinx Kintex7 UltraScale FPGA
- PCIe interface to host PC
- DSP A: master (booting, monitoring, acquisition, …)
- DSP B: real-time operation and closed-loop control @ 310 kHz
- ADC/DAC: FMC mezzanine card SMT-FMC311
- I/O boards (trigger, optical, etc.)

Cavity Synchronization

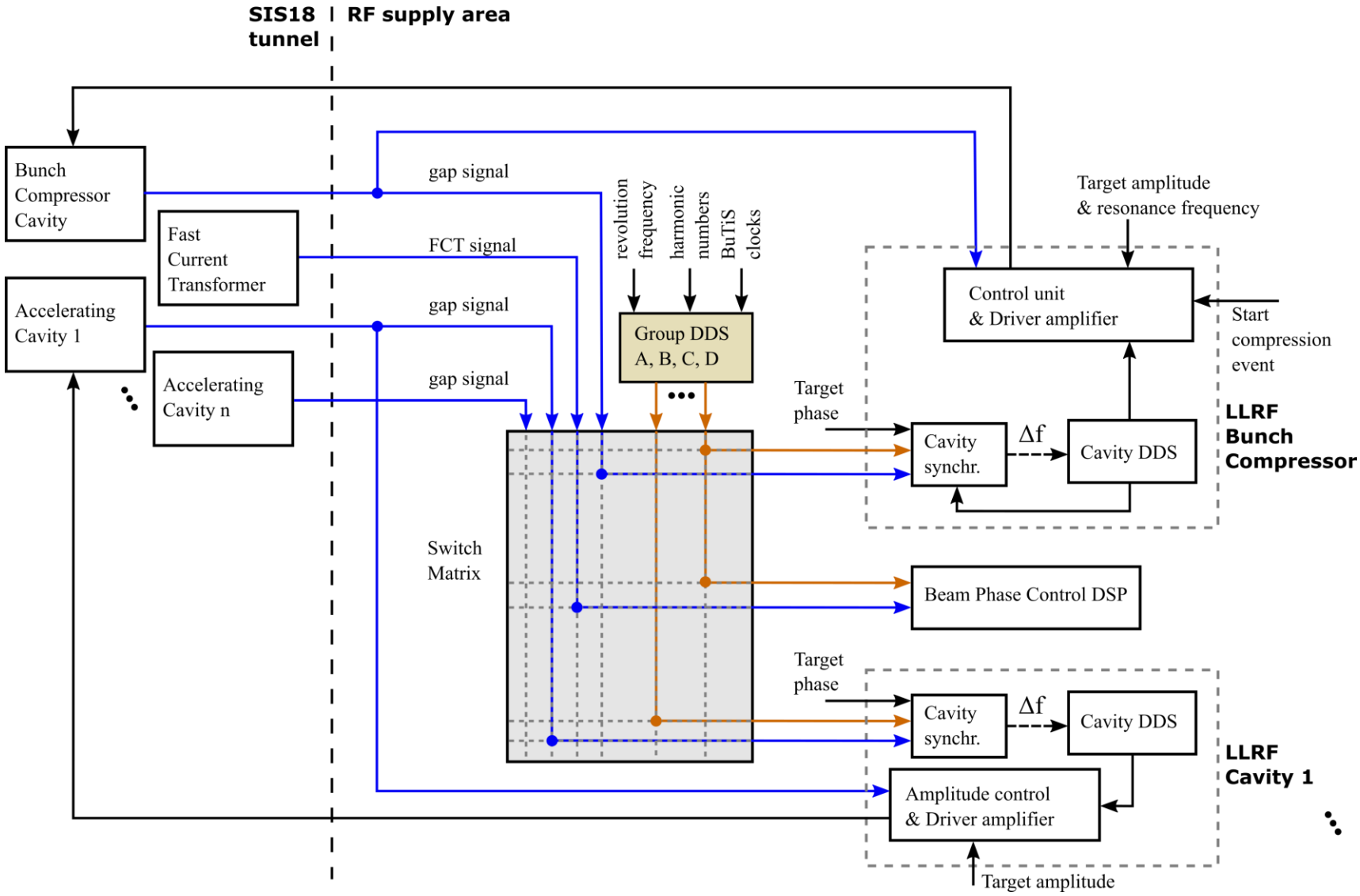

SIS18 Machine Development Experiments (MDE)

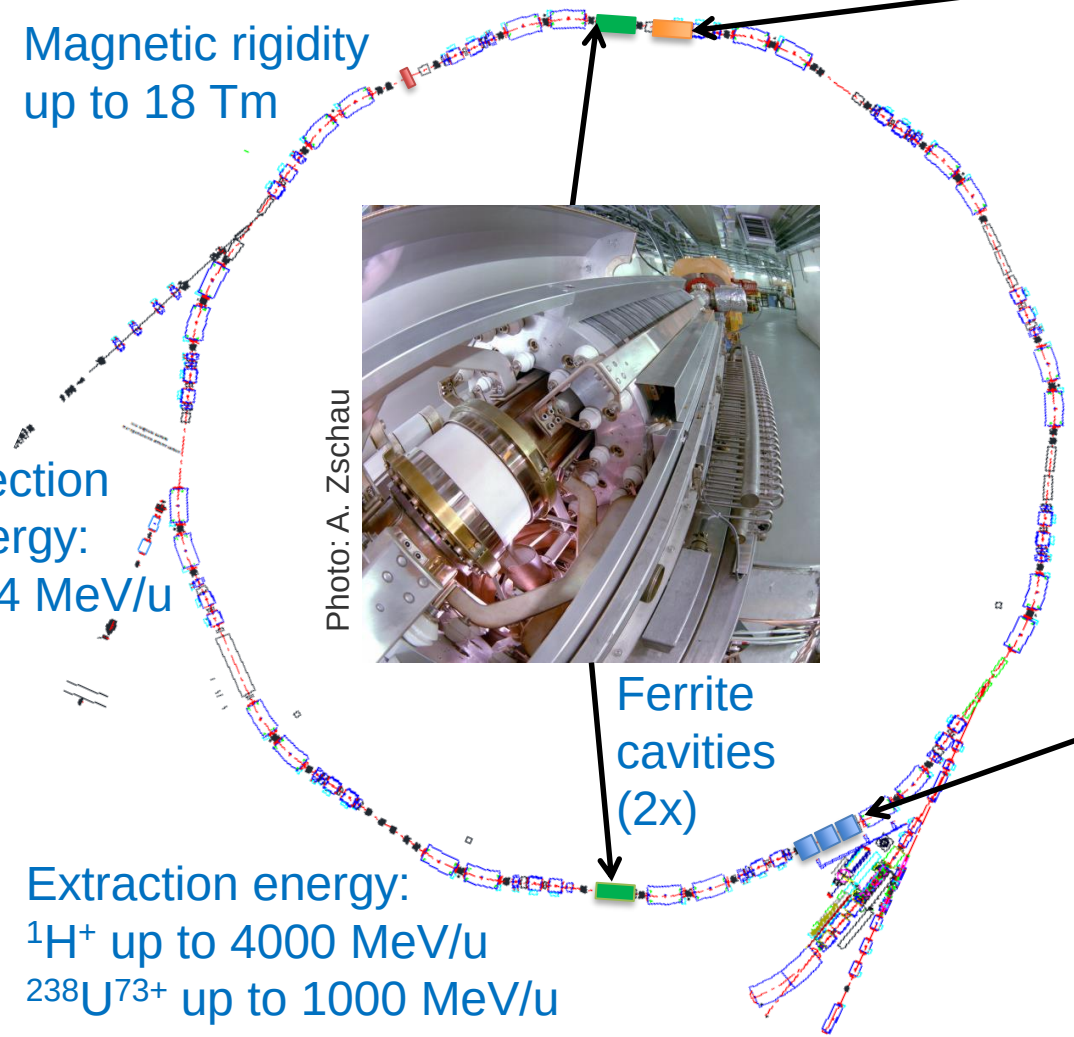

Magnetic rigidity up to 18 Tm

Injection energy: 11.4 MeV/u

Extraction energy:
$^{1}H^{+}$ up to 4000 MeV/u
$^{238}U^{73+}$ up to 1000 MeV/u

Photo: A. Zschau

Ferrite cavities (2x)

Bunch compressor

Photo: G. Otto

MA cavities (3x)

SIS18 Cavity and Group DDS Calibration

- Delay measurements and adjustments
- Cavity calibration: Amplitude & Phase

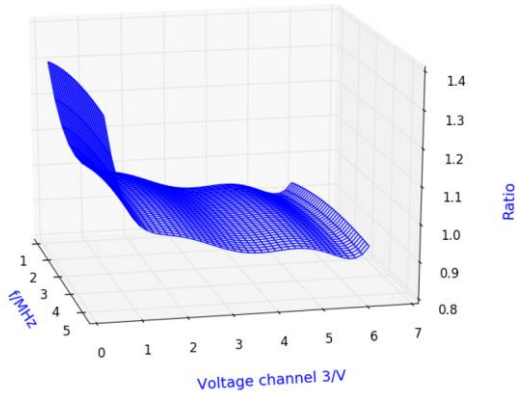

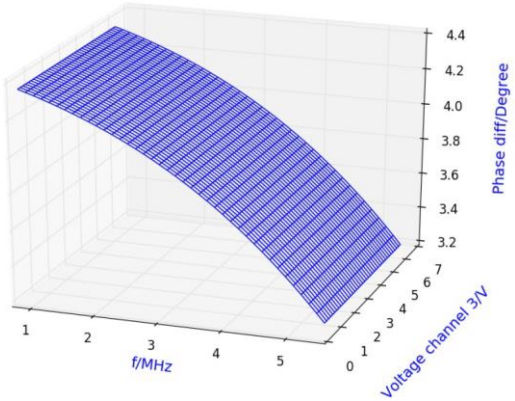

- Group DDS calibration with respect to BuTiS (courtesy A. Andreev)

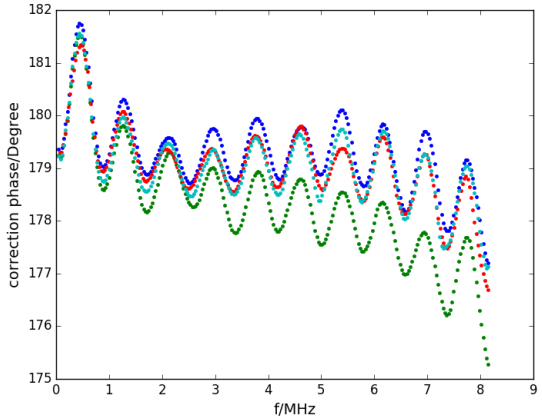

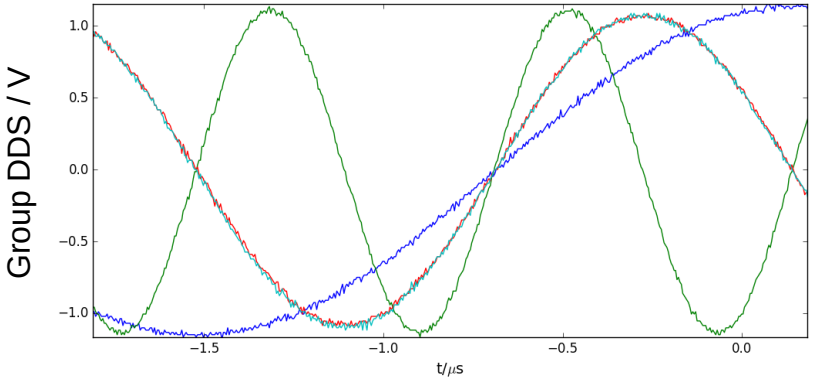

SIS18 MDE: Bunch Merging

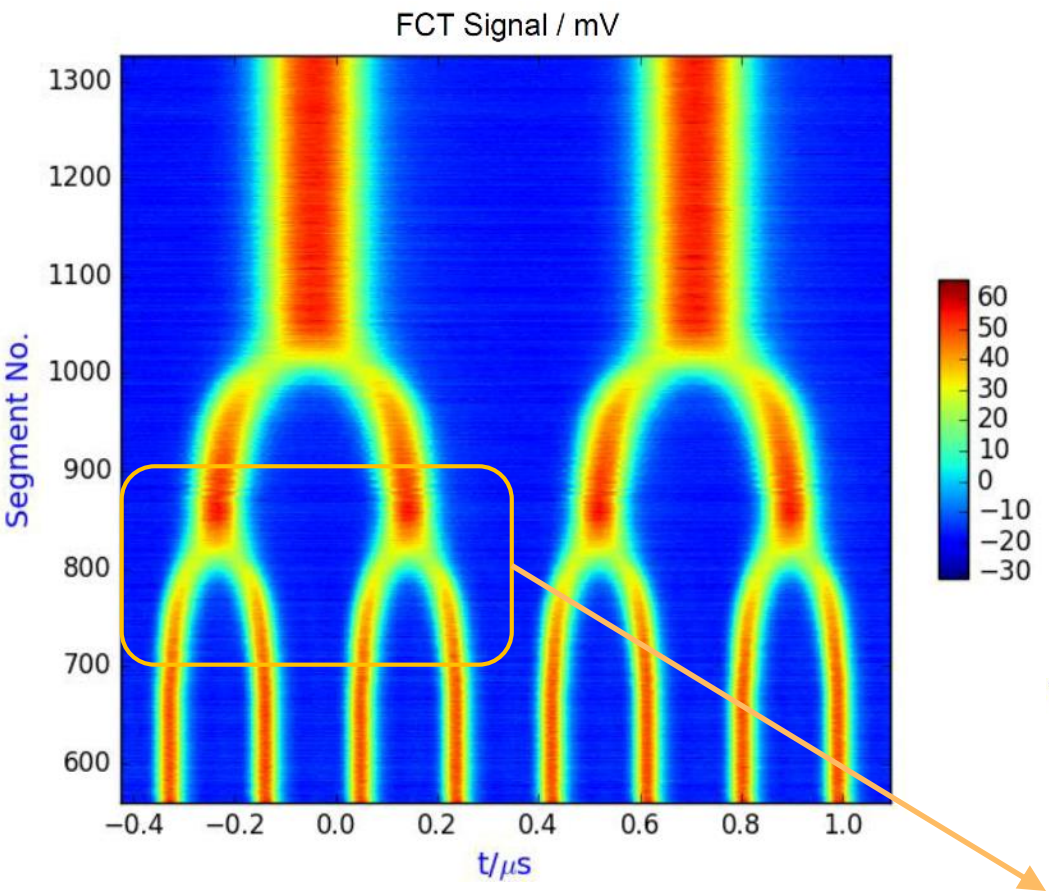

FCT signal for optimized merging (manual phase offsets > ±3° for some systems)

- Bunch merging at flattop
  - Ion species: $^{40}Ar^{18+}$
  - h=8 → 4 → 2
  - Beam current ≈ 1.3 mA
- Fully controlled by CCS, but:
- Phase accuracy of ±3° not yet achieved for all SIS18 systems
- LLRF upgrade still in progress

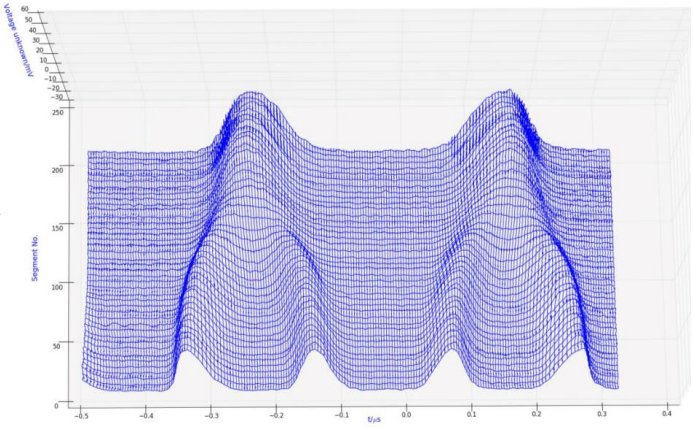

Optimization of Merging Process

FCT Signal

Time

Seg. No.	Offset phase S07BE5: -5° (measurement 028)	Offset phase S07BE5: -3° (measurement 030)	Offset phase S07BE5: +0° (measurement 24)
950	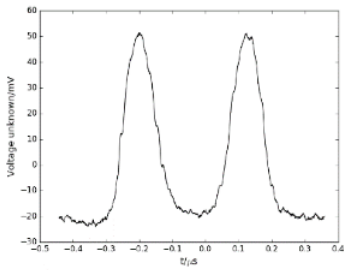	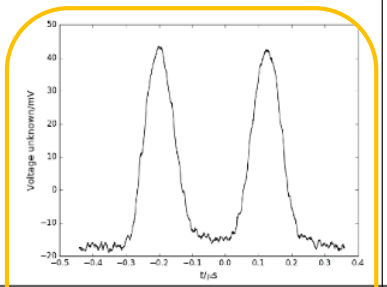	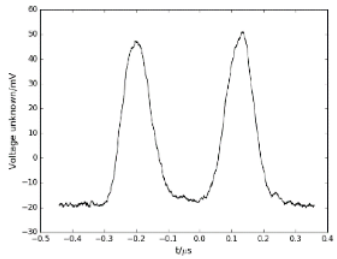
1000	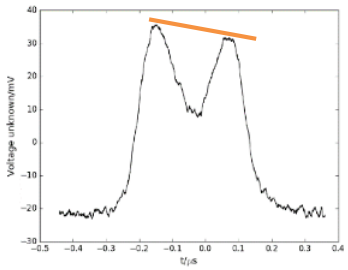	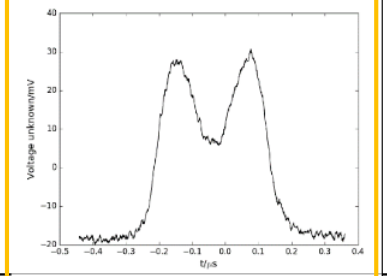	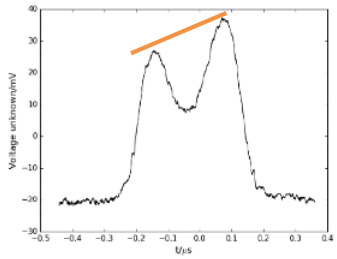
1050	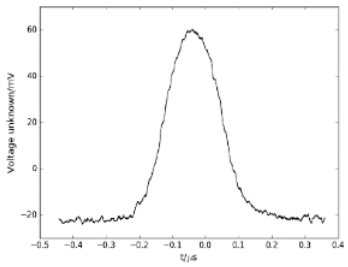	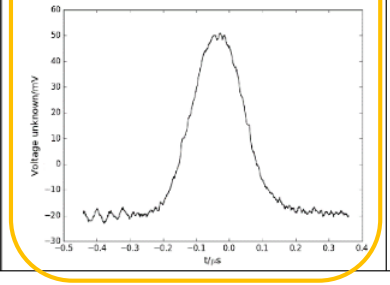	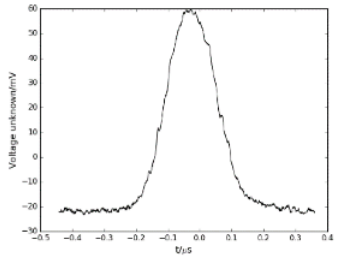

Best result Default CCS value

- Optimization of merging by adjusting the phase of one cavity
- Sensitive test for phase errors of a few degrees

SIS18 MDE: Bunch Compression

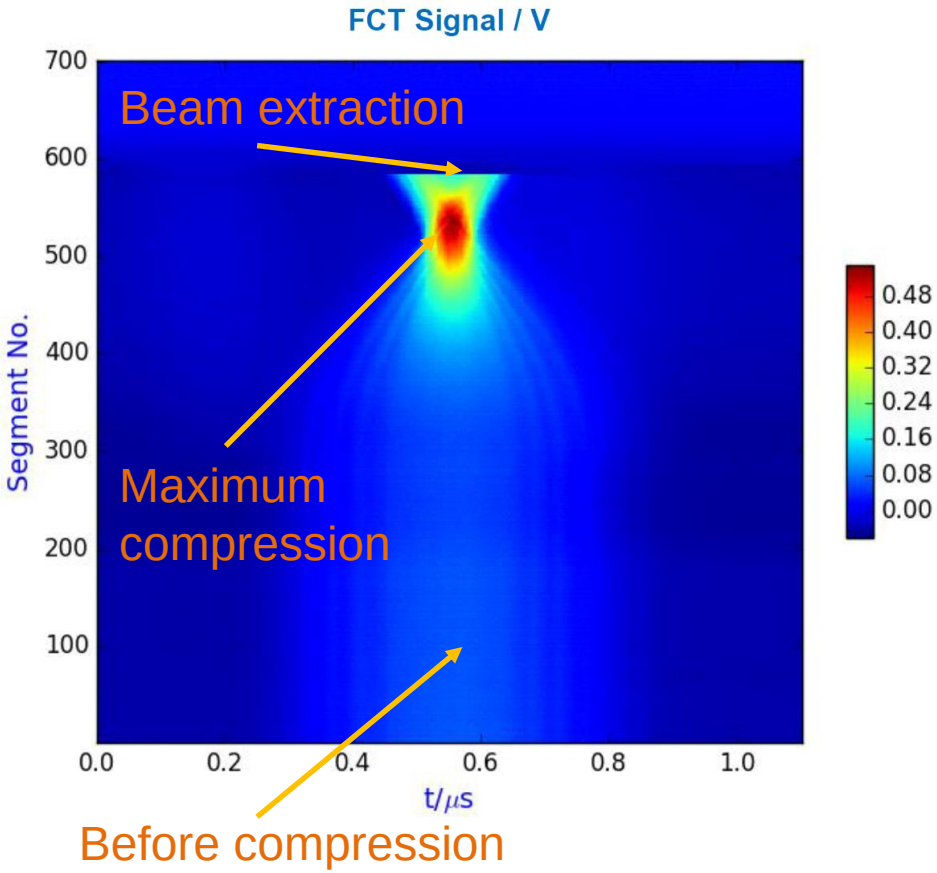

$$\sqrt{\frac{\hat{U}_2}{\hat{U}_1}} = \sqrt{\frac{30760\ \mathrm{V_p}}{760\ \mathrm{V_p}}} \approx 6.36$$

- Bunched beam at flattop, voltage with MA cavity: 760 V
- Pulse of bunch compressor cavity shortly before extraction, rise time < 40 µs, voltage amplitude 30 kV

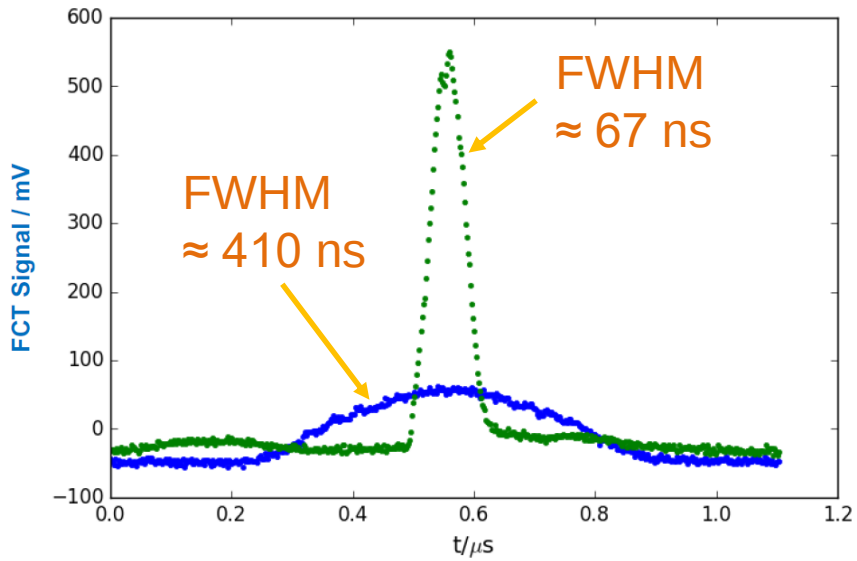

Status of LLRF Realization for FAIR

- Majority of LLRF hardware delivered and tested
- Machine development experiments at existing machines (SIS18, ESR) for verification of LLRF functionality
- Number of 19“ racks for FAIR:
  - SIS100: 153
  - CR: 25
- Rack pre-assembly is ongoing (>50% completed)
- LLRF firmware development is ongoing
- Start of installation in SIS100 supply tunnel in 2023

Summary

- LLRF concept for GSI & FAIR, including upgrade of existing machines:
  - High ramping rate, large frequency span, different types of cavity systems
  - Modular LLRF setup with standardized analog and digital modules
  - Use of the same standardized modules for different purposes
- LLRF topology:
  - Reference signal distribution: BuTiS, Group DDS, Switch Matrix
  - Amplitude and (for some systems) resonance frequency control
  - Cavity synchronization
- SIS18 machine development experiments:
  - Successful multi-harmonic operation: Bunch merging and compression
  - Verification of LLRF topology for FAIR
- Status of LLRF realization for FAIR