Optimization of RF phase and beam loading distribution among RF stations in SuperKEKB

S.Ogasawara#, T.Kobayashi, M.Nishiwaki, K.Akai, K.Nakanishi

High Energy Accelerator Research Organization (KEK)

Table of Contents

SuperKEKB

- e-/e+ collider located in Tsukuba, Japan.
- B meson factory with the **WORLD HIGHEST Luminosity.**

- The 2 featured challenges for luminosity:
  1. "Nano-beam scheme" @ Interaction Point.
     ⇒1/20 beam size than KEKB.
  2. "High beam current"
     ⇒ ×2 higher beam current than KEKB.

⇒ Aim to **×40 Luminosity** ($8 \times 10^{35}\ cm^{-2}s^{-1}$) than KEKB.

Achieved in 2022: $4.71 \times 10^{34}\ cm^{-2}s^{-1}$ @1.46A(LER)/1.14A(HER)

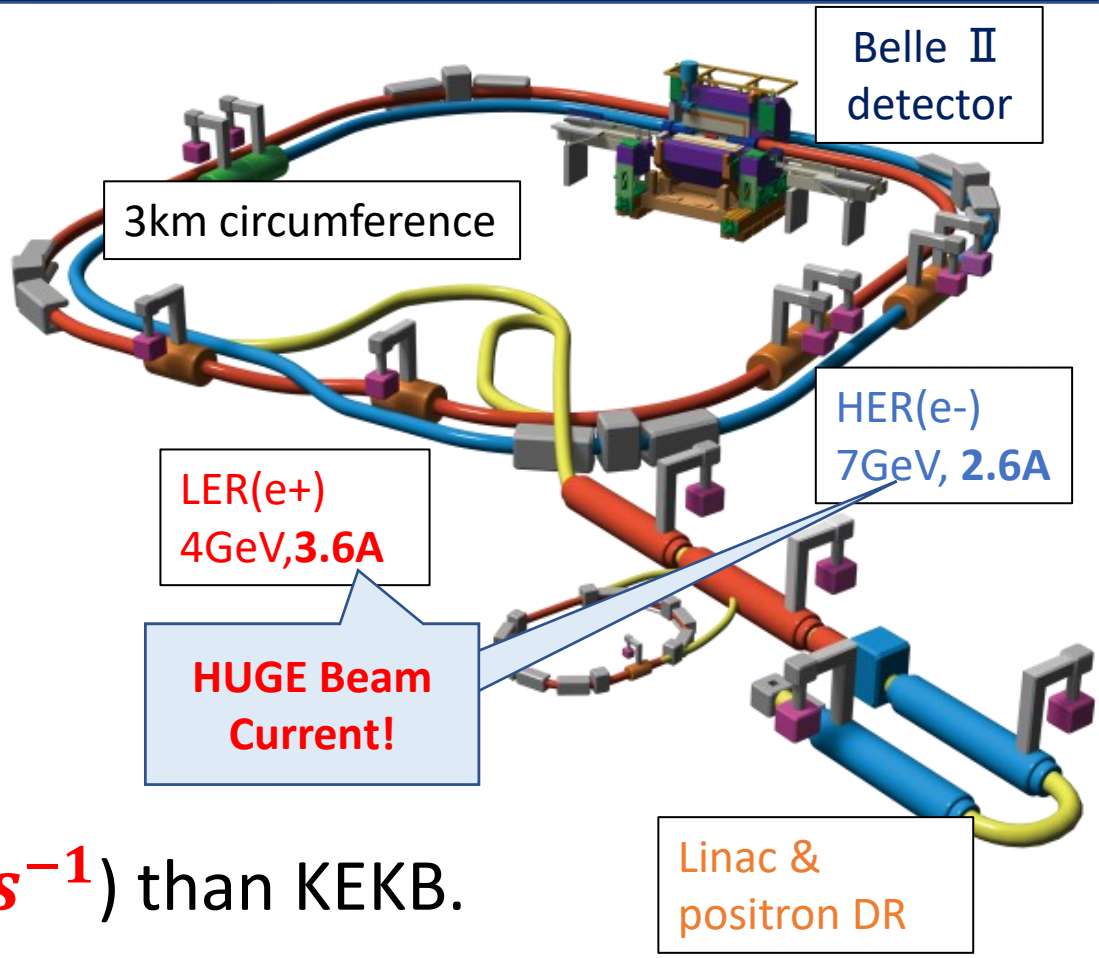

SuperKEKB

- e-/e+ collider located in Tsukuba, Japan.
- B meson factory with the

Critical challenge for RF system

- ├ Beam instability : not today's talk
- └ **Huge beam loading (BL) :** Main theme of this talk

- The 2 ke[illegible]llenges for luminosity:
  1. "Nano-bea[illegible]cheme" @ Interaction Point.
     ⇒1/20 beam size than KEKB.
  2. "High beam current"
     ⇒ ×2 higher beam current than KEKB.

⇒ Aim to **×40 Luminosity** ($8 \times 10^{35}\ cm^{-2}s^{-1}$) than KEKB.

Achieved in 2022: $4.71 \times 10^{34}\ cm^{-2}s^{-1}$ @1.46A(LER)/1.14A(HER)

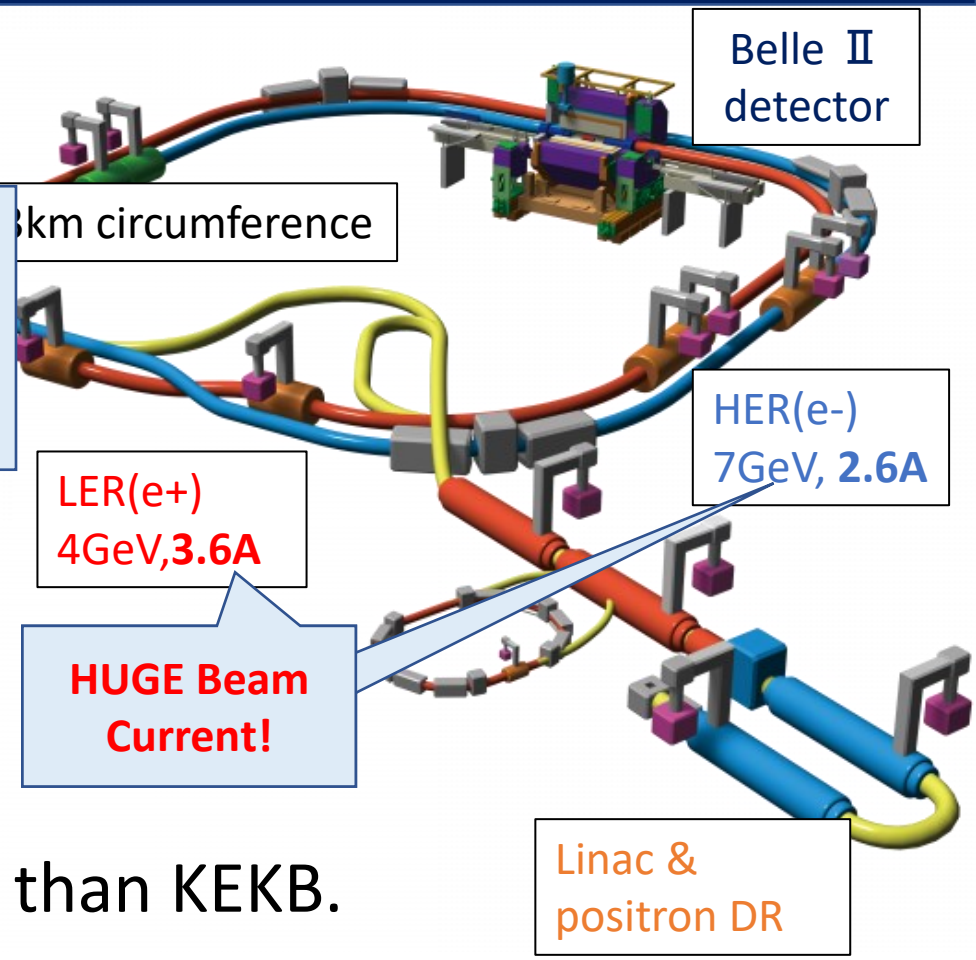

Overview of the RF system

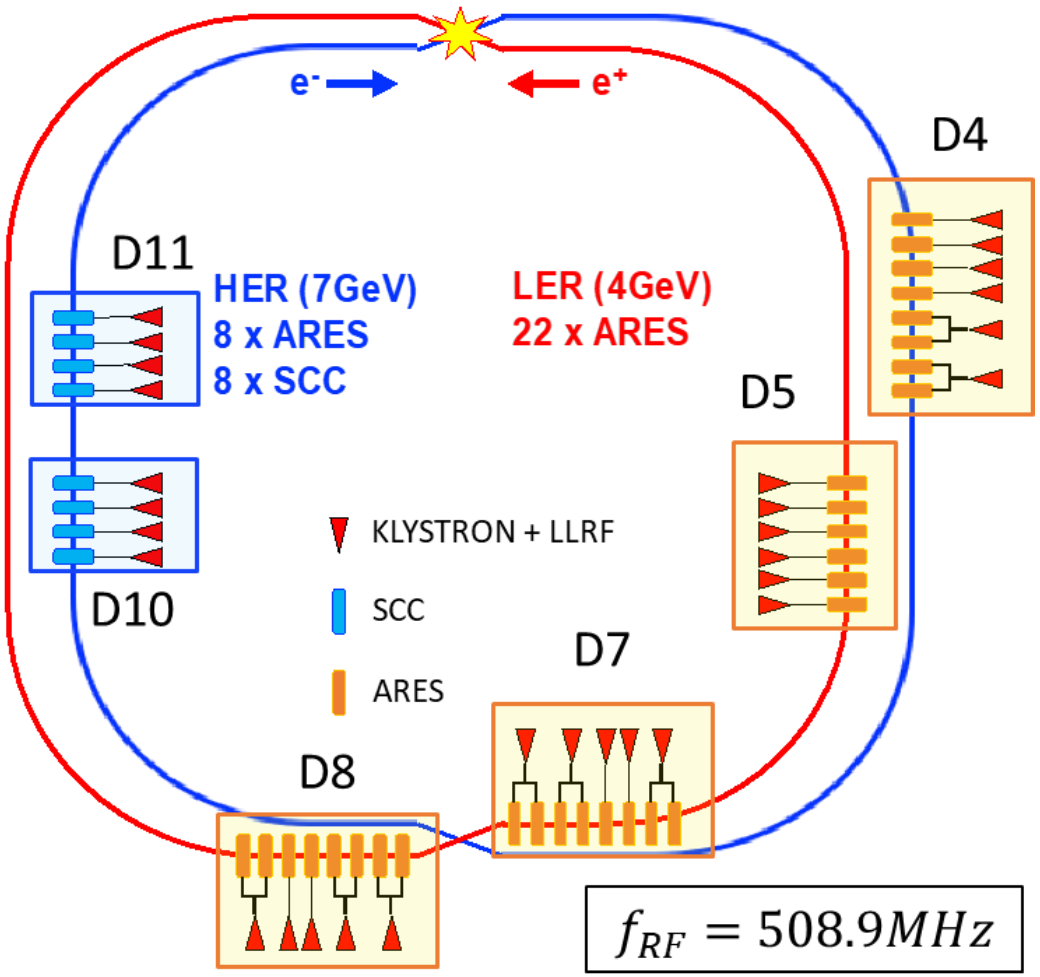

6 Sections, 30 RF stations, 38 cavities.

3 types of RF stations:
"ARES 1:1" : 1 ARES (NC) cavity, 1 KLY. ($V_c = 0.5MV$)
"ARES 1:2" : 2 ARES (NC) cavity, 1 KLY. ($1.0MV$)
"SCC" : 1 SC cavity, 1 KLY. ($1.5MV$)

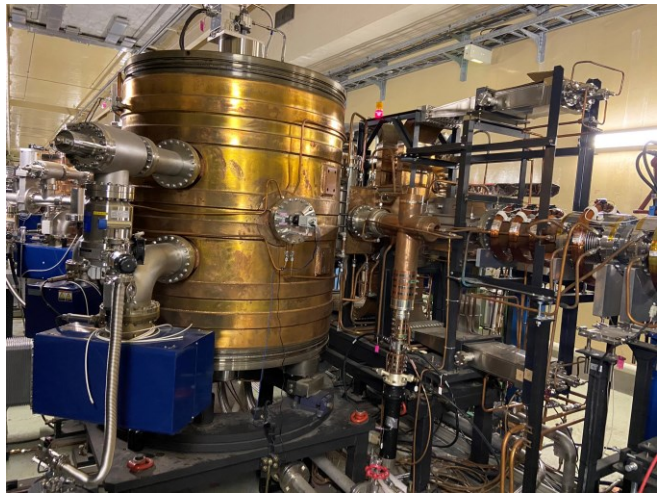

ARES (HER,LER)

SCC (Only HER)

3 types of RF stations in SuperKEKB

"ARES 1:1"
"ARES 1:2"
"SCC"

Klystrons are the same model for the all types. (Rated output is 1.2MW.)
The practical power limit is about 800 kW. (from saturation property, for effective Vc control.)

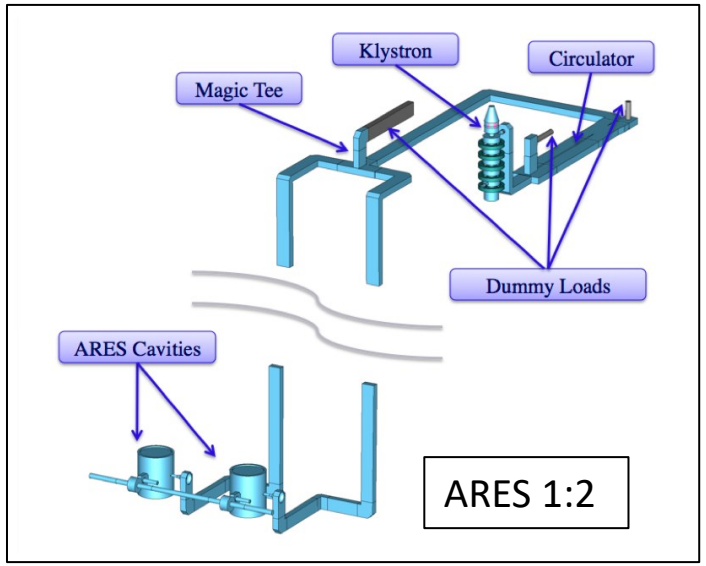

"ARES 1:1" → 1 KLY provides RF to 1 ARES cavity.

"ARES 1:2" → 1 KLY has to provide RF to 2 ARES cavities.

⇒ in ARES 1:2, 2x larger output power is required than 1:1 station.

(if same beam loading per cavity.) *0.5MV/cav.

"SCC" ⇒ 1 KLY (same model) provides to 1 SCC Unit. (Vc = 1.5MV)

But for SCC Unit (input coupler), practical acceptable power is about 400kW.

Each station has respective type!

Configuration of RF system for a section

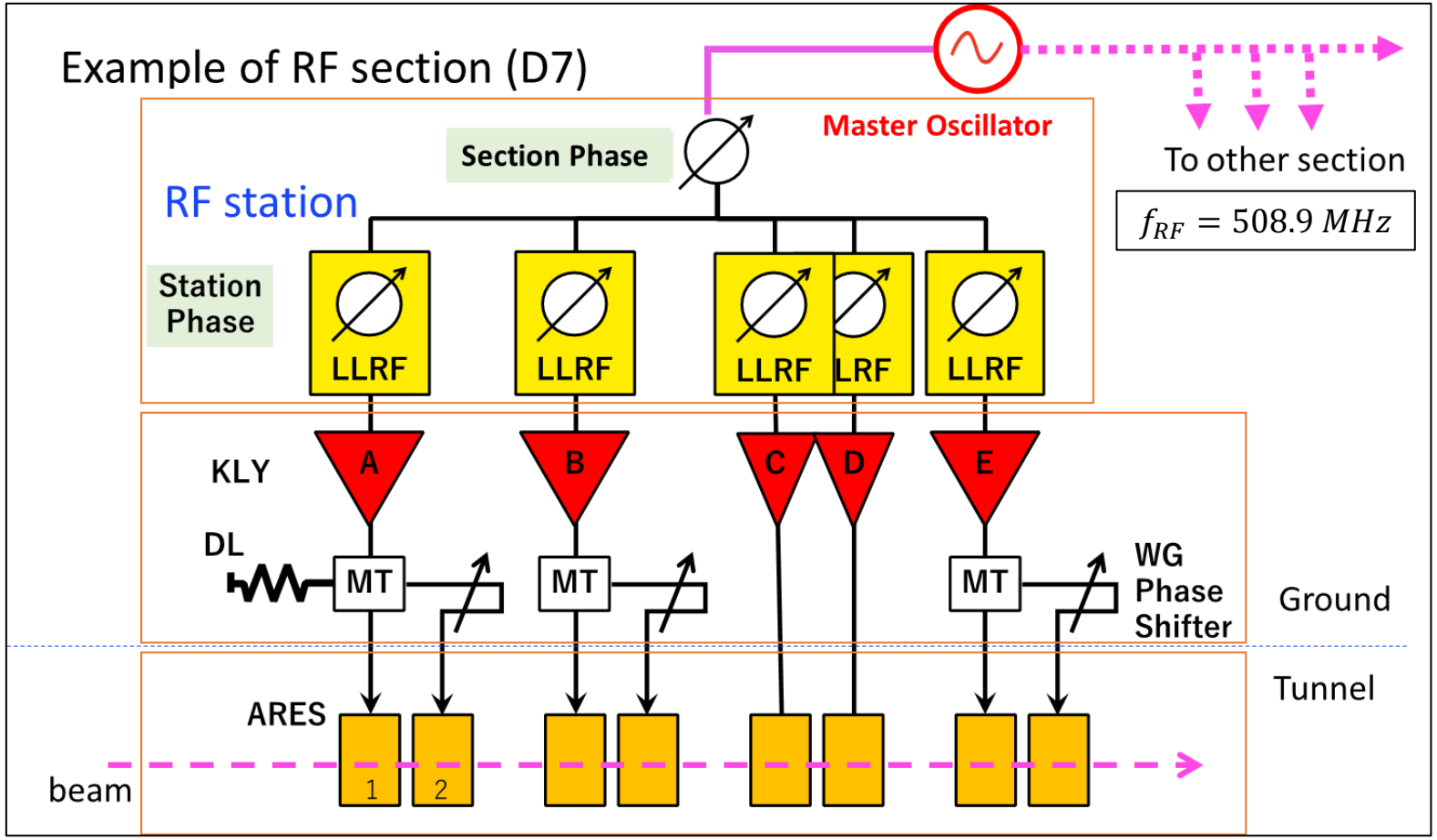

* KLY are the same model for the all types.

D07 section has 5 stations:
2x"ARES 1:1" + 3x"ARES 1:2"
(= 8 ARES cavities)

LLRF has a station phase.
(remote control phase shifter.)

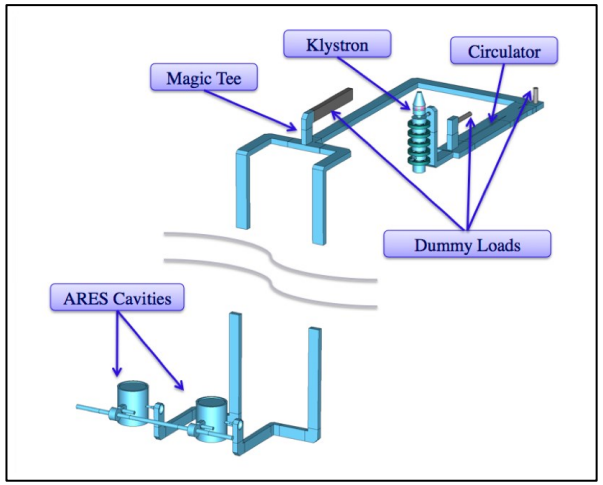

"ARES 1:2" configuration

Beam loading and station phase

synchronous phase depends on vector sum phase ($\phi_{s.sum}$) of all stations : (principle of phase stability)

$$V_0 = V_{c.sum} \cos \phi_{s.sum}$$

$V_0 \equiv \frac{U_0}{e}$, U_0 is the 1-Turn Loss

For each station, ACC phase (ϕ_{acc}) is consequently determined.

The relationship between beam power and ACC phase:

$$P_{beam} = V_c \cos \phi_{acc} \cdot I_{beam}$$ (per each station)

⇒ <u>Beam loading balance is controllable through the station phase!</u>

It should be considered the differences among the station types!

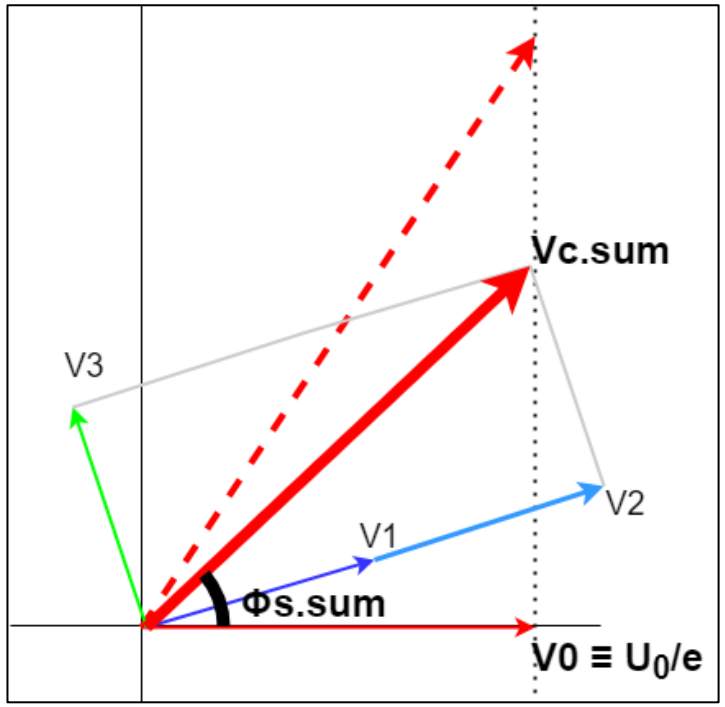

P_{beam} : beam power
V_c : cavity voltage
I_{beam} : beam current

Required RF power in uniform beam loading

Estimation of KLY power with respect to I_{beam}, with same ϕ_{acc} for all stations

$$P_{beam} = V_c \cos\phi_{acc} \cdot I_{beam}$$

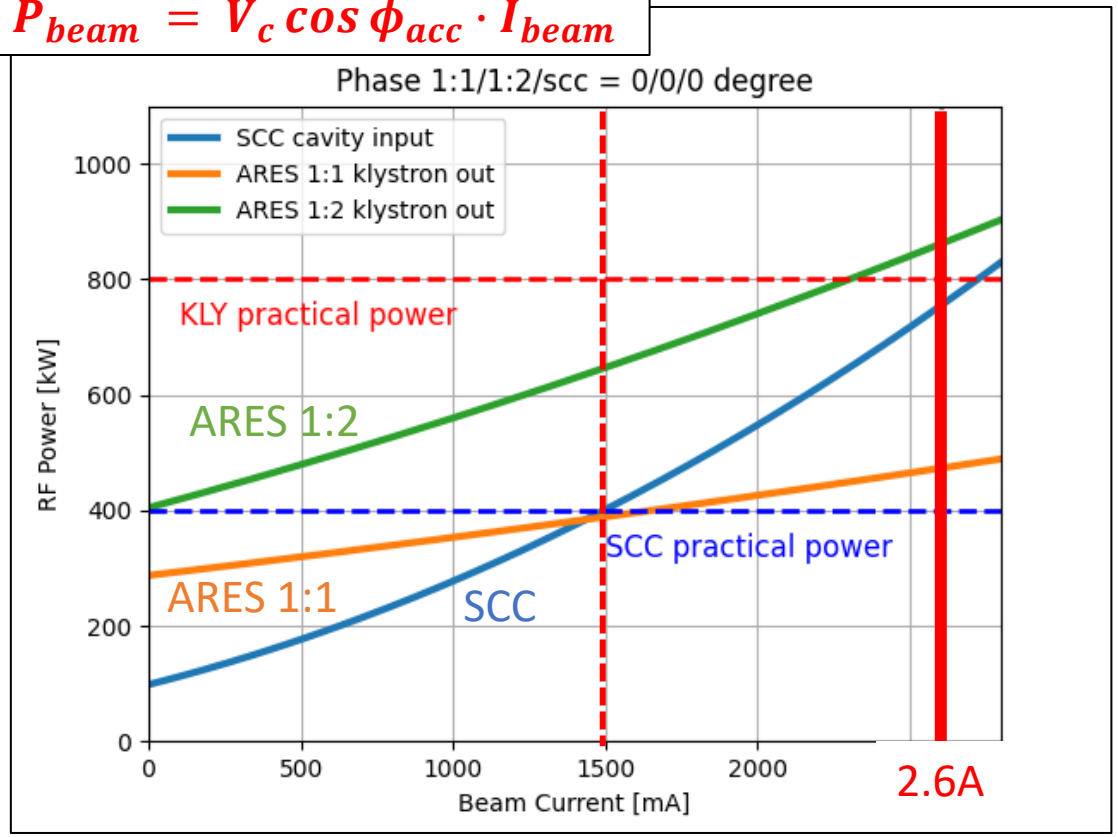

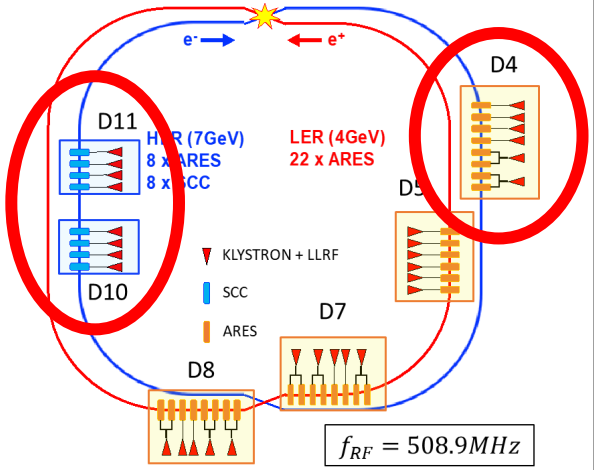

*Scales & angles are not exact.

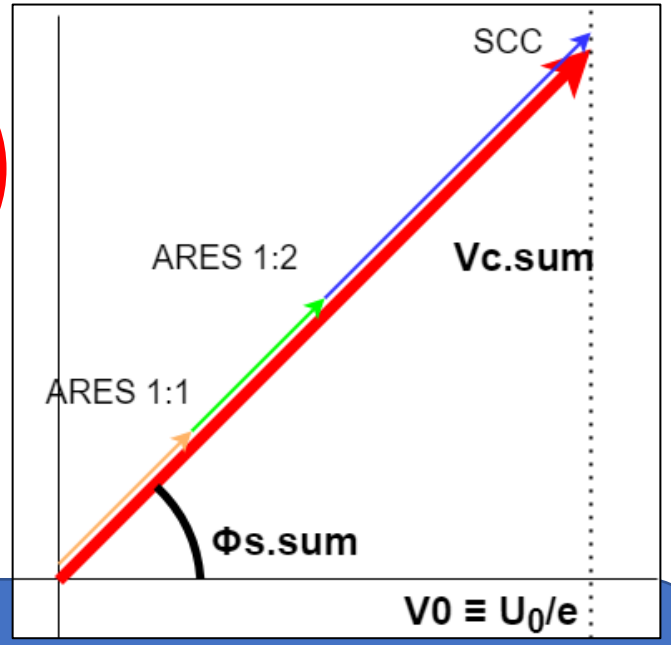

The calculation condition:

- Estimate about **HER** (4x "ARES 1:1", 2x "ARES1:2", 8x SCC)
- Vc = 0.5 MV(ARES) / 1.5 MV (SCC) per a cavity.
- 1-Turn Loss Energy (U_0) = 2.43 MeV.
- It includes reflections and other power loss.

If all ϕ_{acc} are equalized among all stations merely, RF power exceeds the limit @ I_{beam} << design

Appropriate BL distribution by different ϕ_{acc}'s among stations

case of **applying phase differences appropriately** among 3 types of stations.

$$P_{beam} = V_c \cos\phi_{acc} \cdot I_{beam}$$

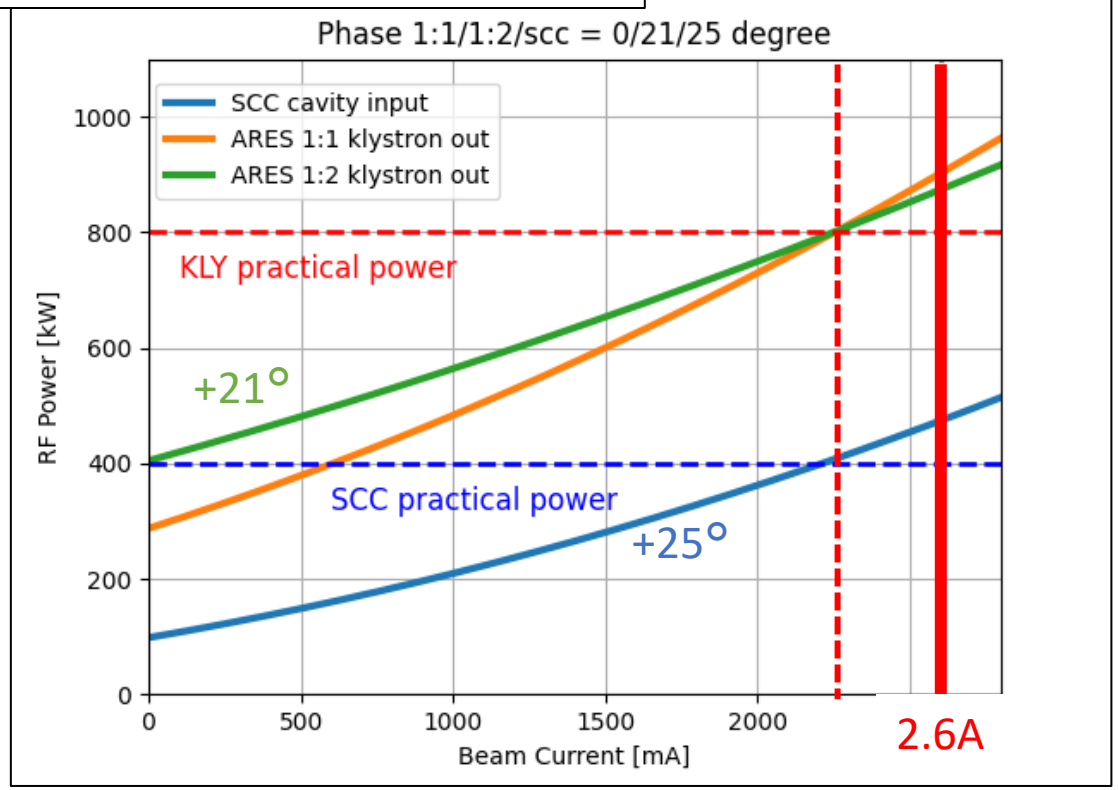

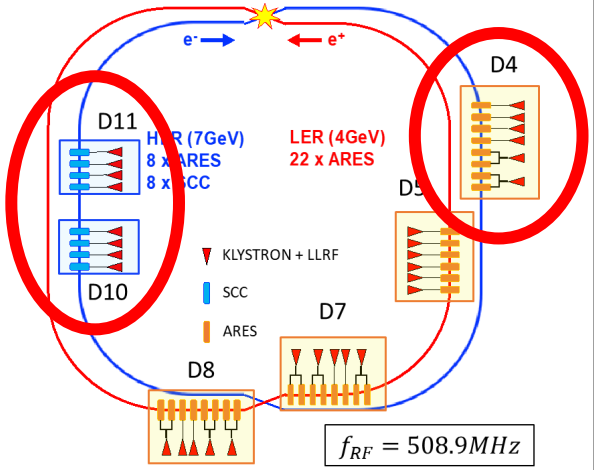

*Scales & angles are not exact.

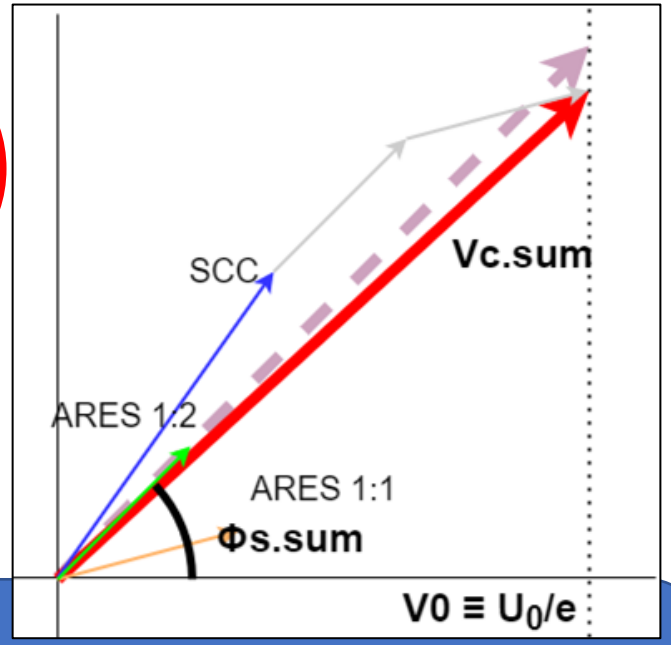

The calculation condition:

- Estimate about **HER** (4x "ARES 1:1", 2x "ARES1:2", 8x SCC)
- Vc = 0.5 MV(ARES) / 1.5 MV (SCC) per a cavity.
- 1-Turn Loss Energy (U_0) = 2.43 MeV.
- It includes reflections and other power loss.

* To achieve design beam current 2.6A, It is essential to augment KLY in "ARES 1:2" station. (make 1:2 into 1:1)

Appropriate BL distribution by different ϕ_{acc}'s among stations

case of **applying phase differences appropriately** among 3 types of stations.

$$P_{beam} = V_c \cos\phi_{acc} \cdot I_{beam}$$

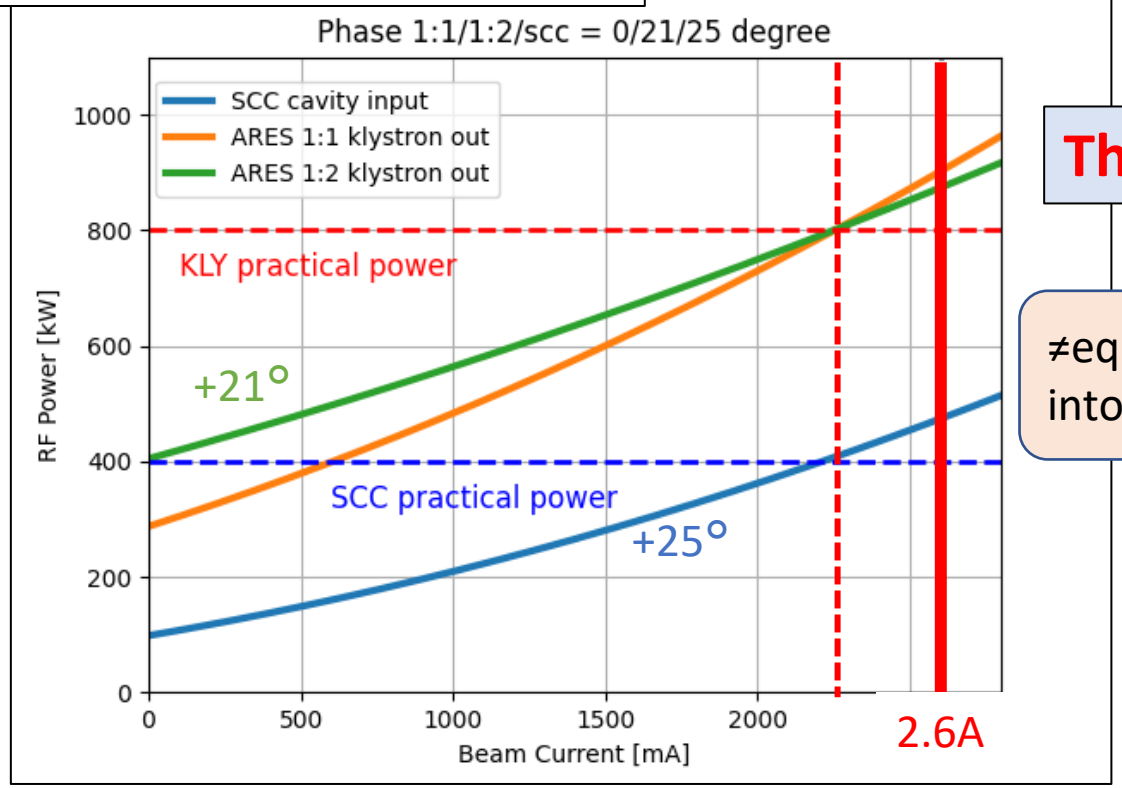

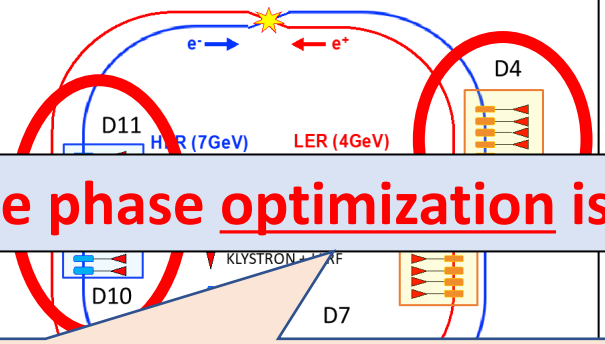

The phase optimization is essential!

≠equalization, apply phase difference to take into account station characters!

*Scales & angles are not exact.

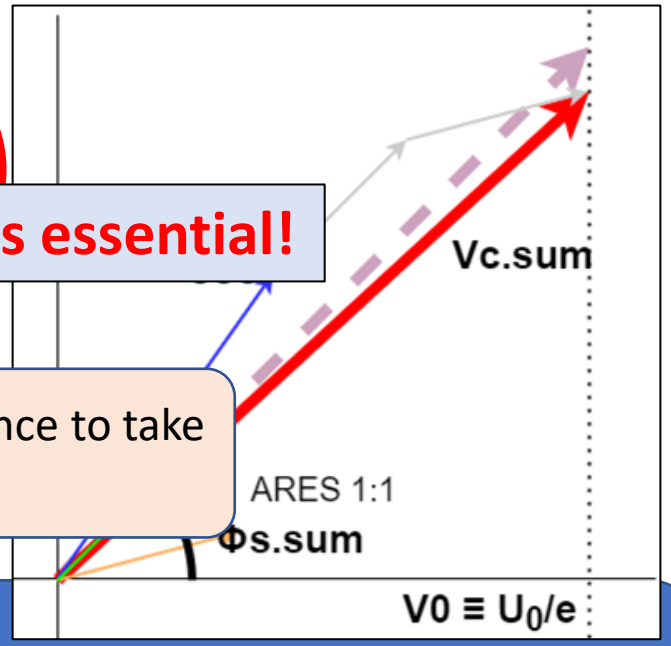

The calculation condition:

- Estimate about **HER** (4x "ARES 1:1", 2x "ARES1:2", 8x SCC)
- Vc = 0.5 MV(ARES) / 1.5 MV (SCC) per a cavity.
- 1-Turn Loss Energy (U_0) = 2.43 MeV.
- It includes reflections and other power loss.

* To achieve design beam current 2.6A, It is essential to augment KLY in "ARES 1:2" station. (make 1:2 into 1:1)

One more important requirement

One more important condition: The adjustment **must keep $V_0 = V_{c.sum} \cos \phi_{s.sum}$**

If this condition is changed,

Beam phase shifts to keep the relationship. (phase stability)

Bunch position (timing) changes following the synchronous phase.

Bunch passage timing at collision point is also change.

Bunches pass each other without colliding.

Lose Luminosity!

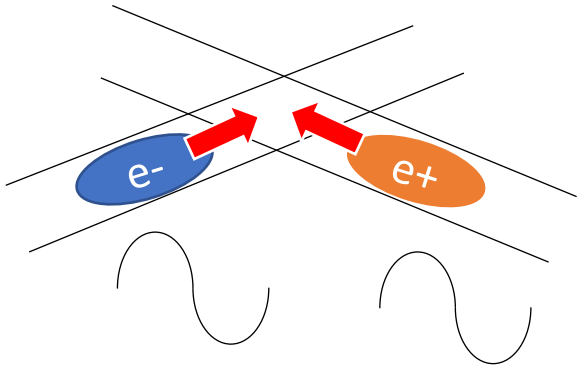

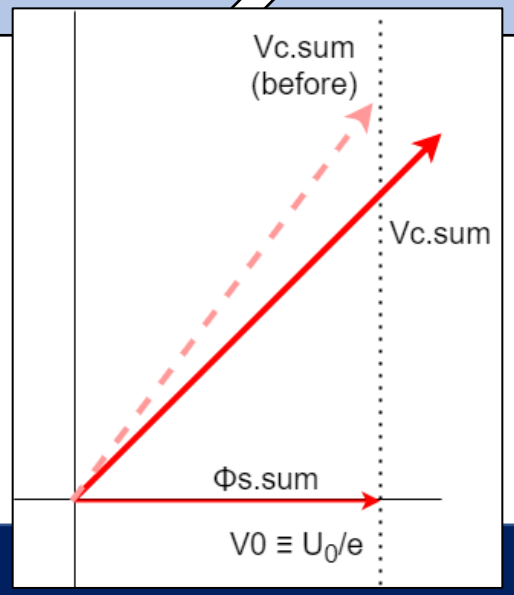

One more important requirement

One more important condition: The adjustment **must keep $V_0 = V_{c.sum} \cos \phi_{s.sum}$**

If this condition is changed,

Beam phase shifts to keep the relationship. (phase stability)

Bunch position (timing) changes following the synchronous phase.

Bunch passage timing at collision point is also change.

Bunches pass each other without colliding.

Lose Luminosity!

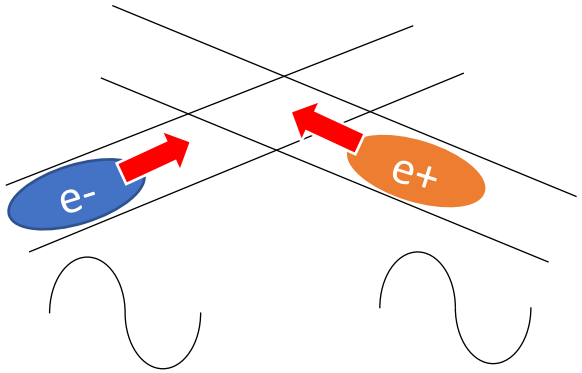

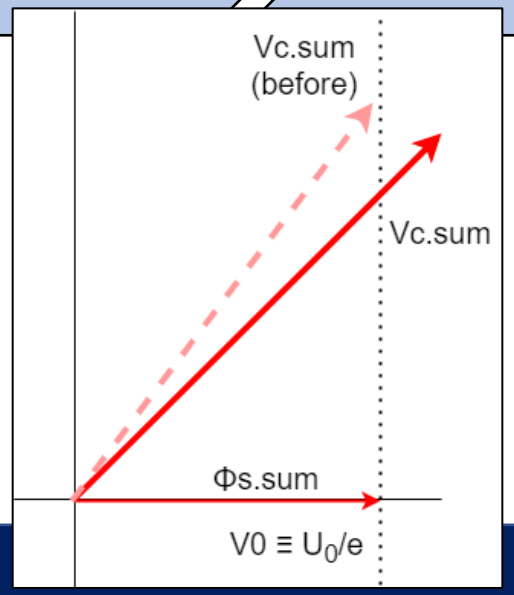

Beam phase shift!

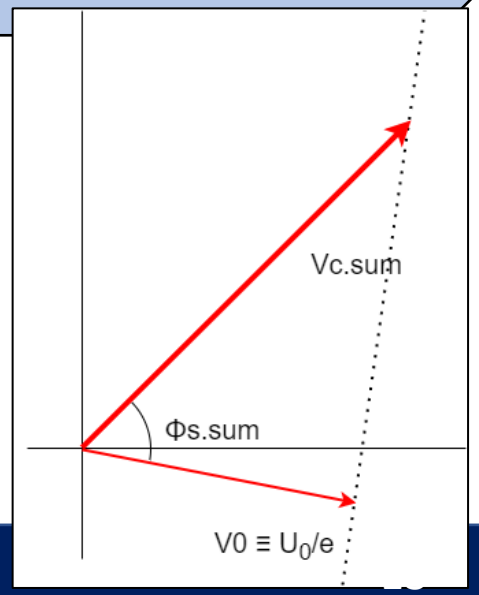

Procedure of beam loading adjustment

Evaluate ϕ_{acc} for each station (before adjustment)

→

Calculate appropriate phase at each station

→

Move phase shifters

To evaluate, use RF Power measurement. (Next slide)

requirements:

- **Arbitrary phase differences are applicable** for each stations. (to maximize reachable I_{beam})
- **Should not change beam phase** before/after the adjustment. (to ensure luminosity)

Φ_{acc} evaluation from RF power @each station

P_{kly} : KLY output*
P_{ref} : Cavity reflect*
P_{wall} : Cavity wall loss, Kept constant by LLRF.
P_{beam} : Beam Loading

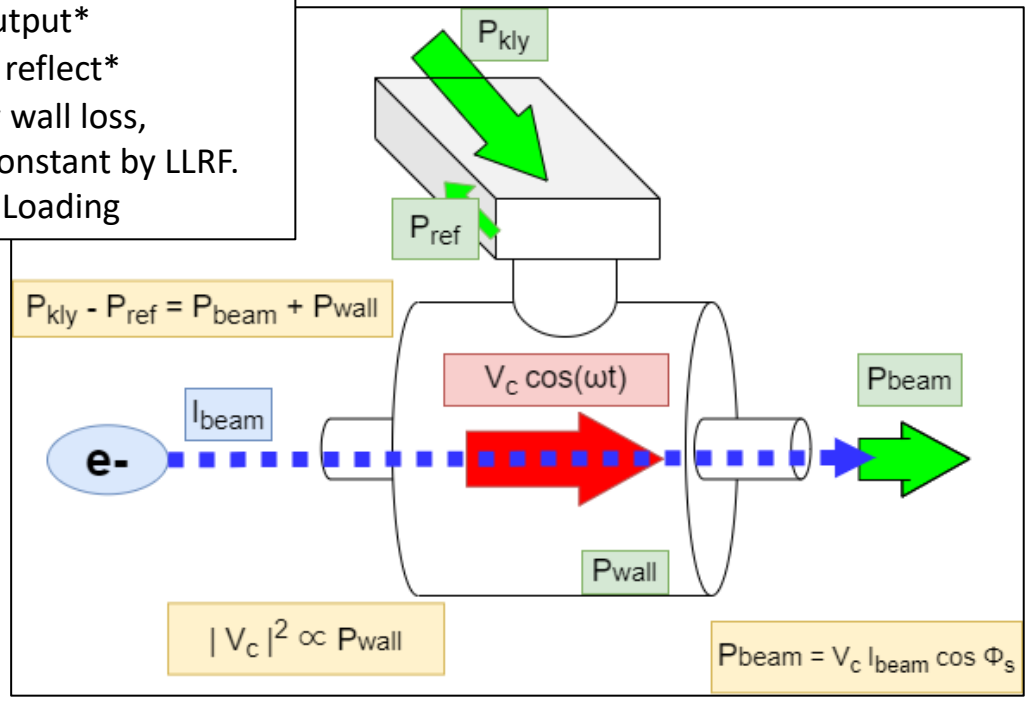

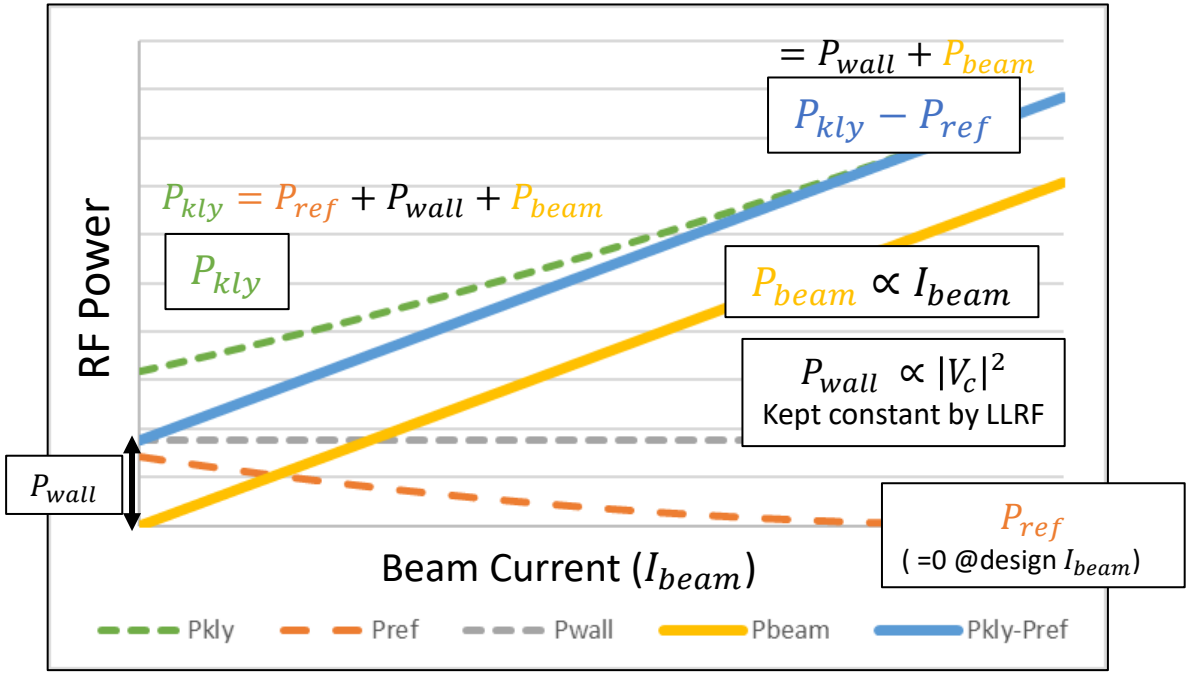

$$P_{kly} - P_{ref} = P_{wall} + P_{beam}$$

Actually, HP-RF measurement is not accurate enough.
⇒ Use the Linear Fit of $P_{beam} - I_{beam}$ plot to ensure the reliability.

⇒ P_{beam} **is obtained** from these RF power measurement.
then, Φ_{acc} **is also calculated** from $P_{beam} = V_c \cos\Phi_{acc} \cdot I_{beam}$ for each station.

Φ_{acc} evaluation from RF power @each station

P_{kly} : KLY output*
P_{ref} : Cavity reflect*
P_{wall} : Cavity wall loss,
Kept constant by LLRF.
P_{beam} : Beam Loading

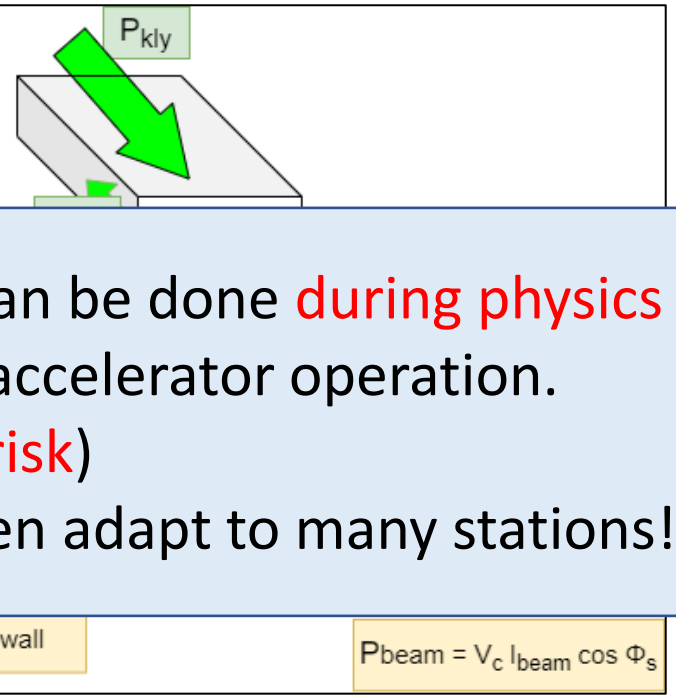

- ✓ This evaluation can be done during physics run.
- ✓ Don't affect any accelerator operation. (No beam abort risk)
- ✓ Easy and fast, even adapt to many stations!

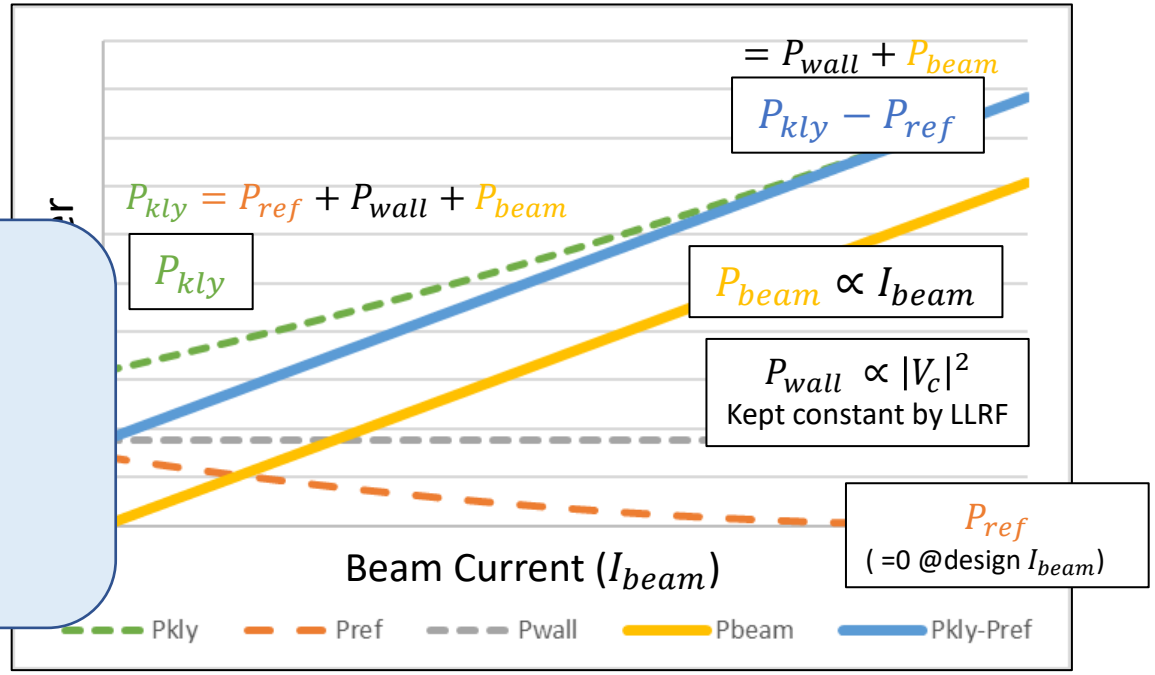

$$P_{kly} - P_{ref} = P_{wall} + P_{beam}$$

Actually, HP-RF measurement is not accurate enough.
⇒ Use the Linear Fit of $P_{beam} - I_{beam}$ plot to ensure the reliability.

⇒ P_{beam} **is obtained** from these RF power measurement.
then, Φ_{acc} **is also calculated** from $P_{beam} = V_c \cos\Phi_{acc} \cdot I_{beam}$ for each station.

Calculation of the optimum phase

When all station phase set to a same value ϕ_{tgt}, it has to satisfy: (To not change beam phase)

$$V_0 = \sum_i^N V_i \cos\phi_{tgt}$$

⇒ V_0 can be obtained from vector sum.
($V_0 = V_{c.sum} \cos\phi_{s.sum}$)

When applying phase difference $\Delta\phi_i$ at i-th station, ϕ_{tgt} has to satisfy:

$$V_0 = \sum_i^N V_i \cos(\phi_{tgt} + \Delta\phi_i)$$

$$\phi_{\mathrm{tgt}} = \cos^{-1}\frac{V_0}{\sqrt{{V_{si}}^2 + {V_{co}}^2}} + \sin^{-1}\frac{-V_{si}}{\sqrt{{V_{si}}^2 + {V_{co}}^2}}$$

$$V_{co} = \sum\{V_i \cos\Delta\phi_i\}\ , V_{si} = \sum\{V_i \sin\Delta\phi_i\}$$

Known parameters

There are N cavities on the ring.
V_i : The i-th station's Vc.
ϕ_i : The i-th station's ϕ_{acc}.
V_0 : The required acceleration voltage.

Calculation of the optimum phase

When all station phase set to a same value ϕ_{tgt}, it has to satisfy:

$$V_0 = \sum_i^N V_i \cos\phi_{tgt}$$

⇒ V_0 can
(V_0 =

When applying phase difference $\Delta\phi_i$ at i-th station, ϕ_{tgt} has

$$V_0 = \sum_i^N V_i \cos(\phi_{tgt} + \Delta\phi_i)$$

$$\phi_{\mathrm{tgt}} = \cos^{-1}\frac{V_0}{\sqrt{{V_{si}}^2 + {V_{co}}^2}} + \sin^{-1}\frac{-V_{si}}{\sqrt{{V_{si}}^2 + {V_{co}}^2}}$$

$$V_{co} = \sum\{V_i \cos\Delta\phi_i\}\ , V_{si} = \sum\{V_i \sin\Delta\phi_i\}$$

$$V_0 \neq V_{c.sum} \cos\phi_{s.sum}$$

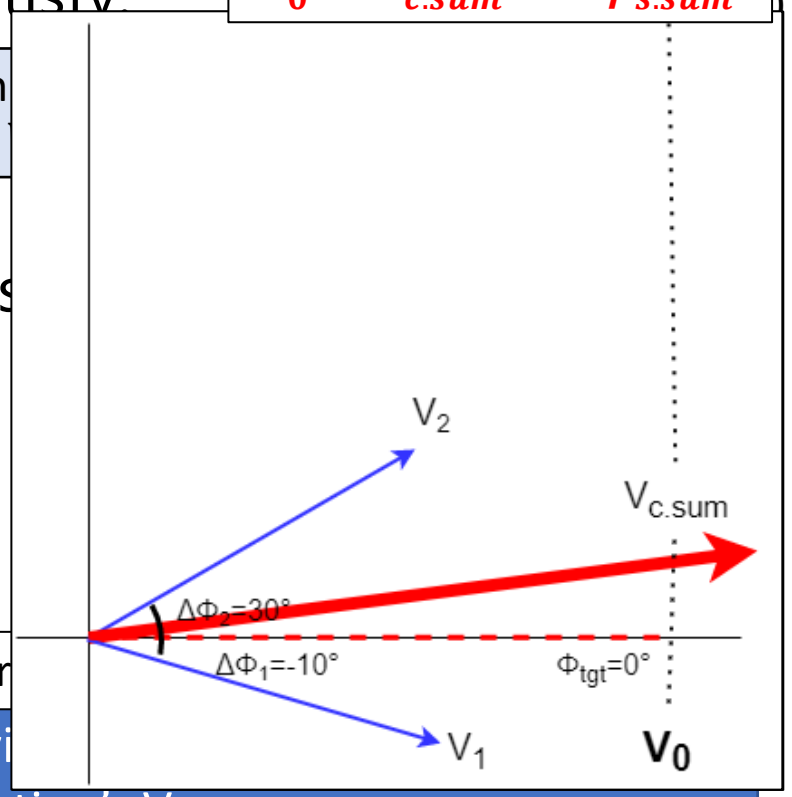

Known par

There are N cavi

V_i : The i-th station's V_0

ϕ_i : Th

V_0 : The required acceleration voltage.

$$V_0 = V_1 \cos(\phi_{tgt} - 10) + V_2 \cos(\phi_{tgt} + 30)$$

Calculation of the optimum phase

When all station phase set to a same value ϕ_{tgt}, it has to satisfy:

$$V_0 = \sum_i^N V_i \cos\phi_{tgt}$$

⇒ V_0 can
(V_0 =

When applying phase difference $\Delta\phi_i$ at i-th station, ϕ_{tgt} has

$$V_0 = \sum_i^N V_i \cos(\phi_{tgt} + \Delta\phi_i)$$

$$\phi_{tgt} = \cos^{-1}\frac{V_0}{\sqrt{{V_{si}}^2 + {V_{co}}^2}} + \sin^{-1}\frac{-V_{si}}{\sqrt{{V_{si}}^2 + {V_{co}}^2}}$$

$$V_{co} = \sum\{V_i \cos\Delta\phi_i\}\ , V_{si} = \sum\{V_i \sin\Delta\phi_i\}$$

$$V_0 = V_{c.sum} \cos\phi_{s.sum}$$

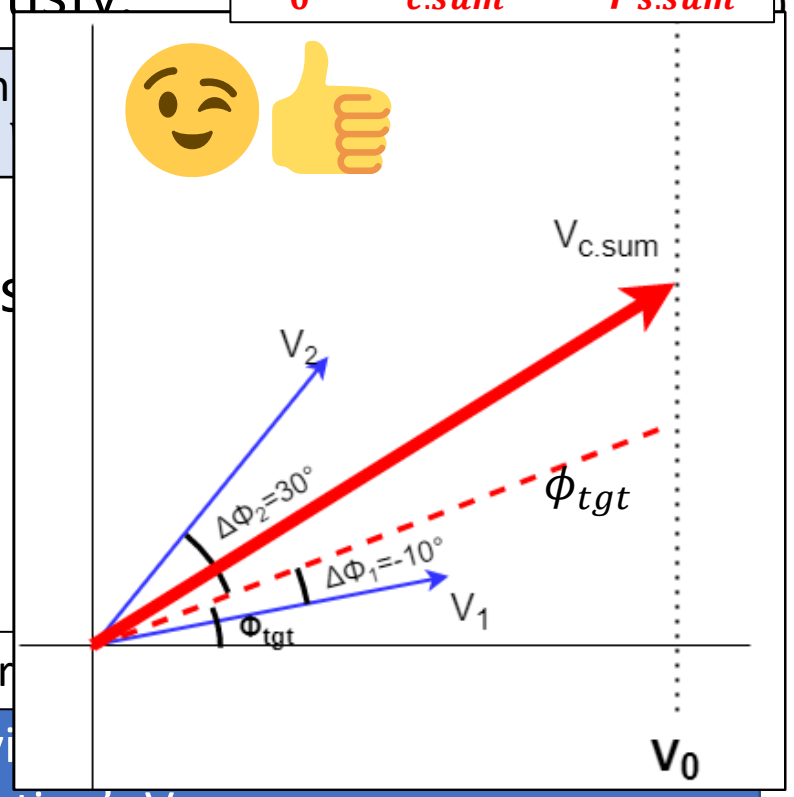

Known par

There are N cavi

V_i : The i-th station's V_c

ϕ_i : Th

V_0 : The required acceleration voltage.

$$V_0 = V_1 \cos(\phi_{tgt} - 10) + V_2 \cos(\phi_{tgt} + 30)$$

Beam loading optimization tool

Newly developed beam loading evaluation & optimization tool.

- Draw $P_{beam} - I_{beam}$ plot at specified time period.
  (Usually, during stacking beam current.)
- In the main plot, vertical axis is selectable:
  - $P_{kly} - P_{ref}$ (= $P_{beam} + P_{wall}$(= offset))
  - $P_{kly} - P_{ref} - P_{wall}$ (= P_{beam})
  - $(P_{kly} - P_{ref} - P_{wall})/V_c$ (V_c-normalized P_{beam})

- Easy-to-read display of the slope and phase distribution.
- Developed by Python3 + PySimpleGUI

$$P_{beam} + P_{wall} = P_{kly} - P_{ref}$$

python™

PySimpleGUI™

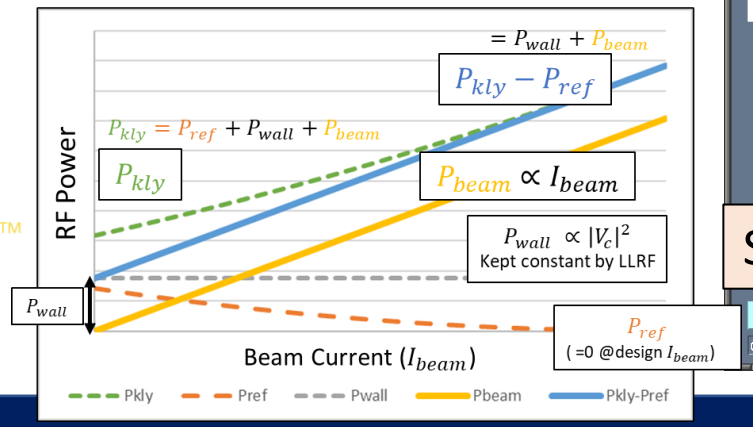

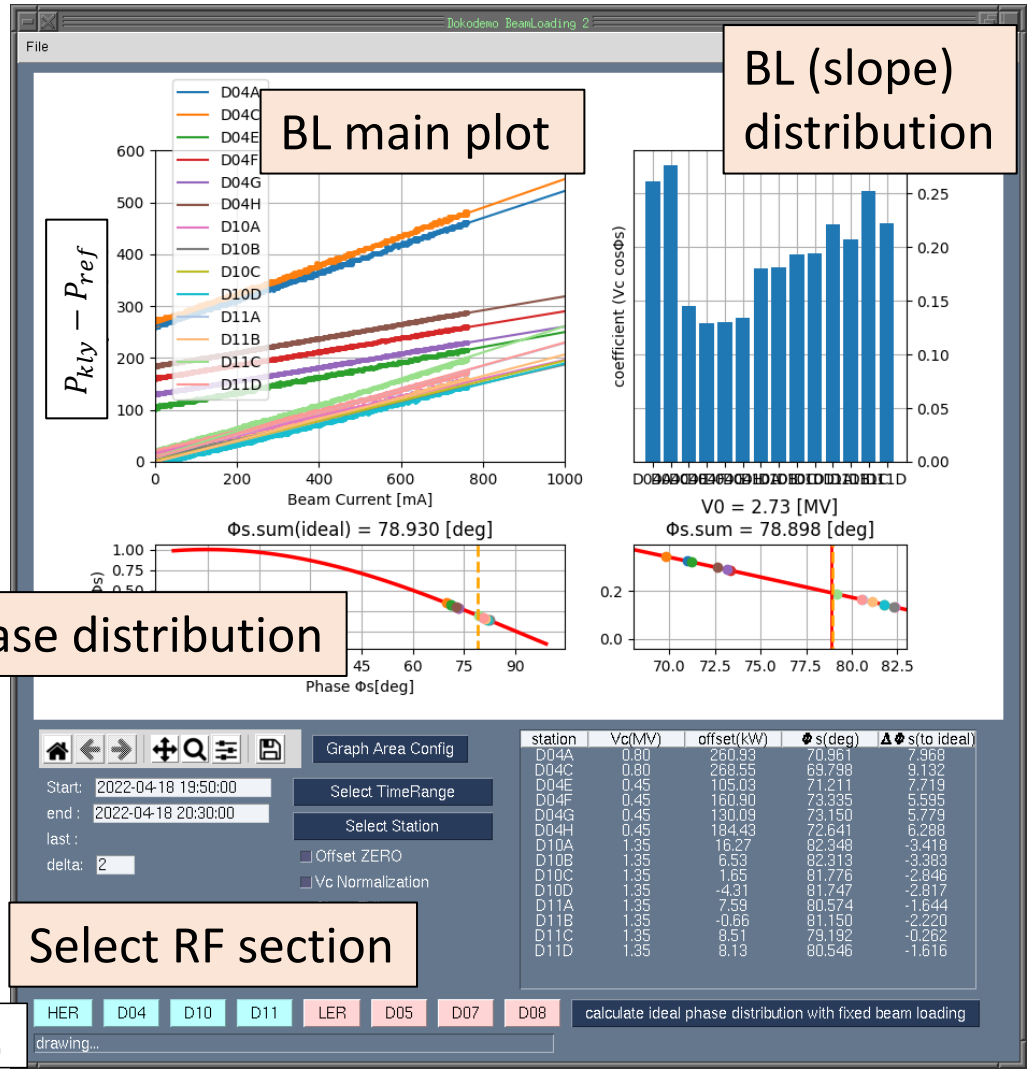

Beam loading optimization tool

Newly developed beam loading evaluation & optimization tool.

- Draw $P_{beam} - I_{beam}$ plot at specified time period.
  (Usually, during stacking beam current.)
- In the main plot, vertical axis is selectable:
  - $P_{kly} - P_{ref}$ (= $P_{beam} + P_{wall}$(= offset))
  - $P_{kly} - P_{ref} - P_{wall}$ (= P_{beam})
  - $(P_{kly} - P_{ref} - P_{wall})/V_c$ (V_c-normalized P_{beam})

- Easy-to-read display of the slope and phase distribution.
- Developed by Python3 + PySimpleGUI

$$P_{beam} + P_{wall} = P_{kly} - P_{ref}$$

python™

PySimpleGUI™

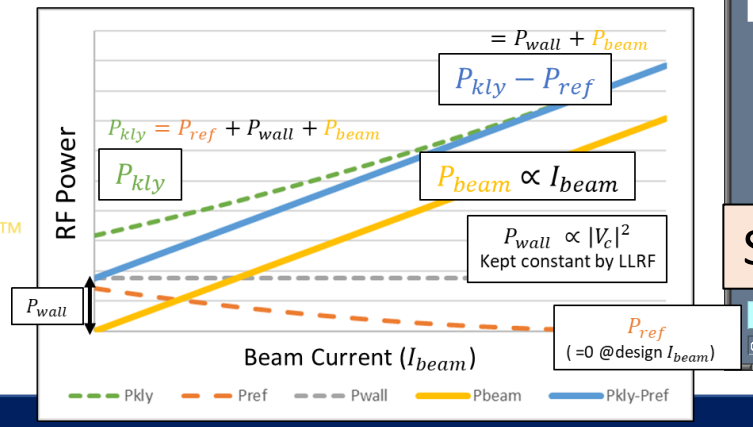

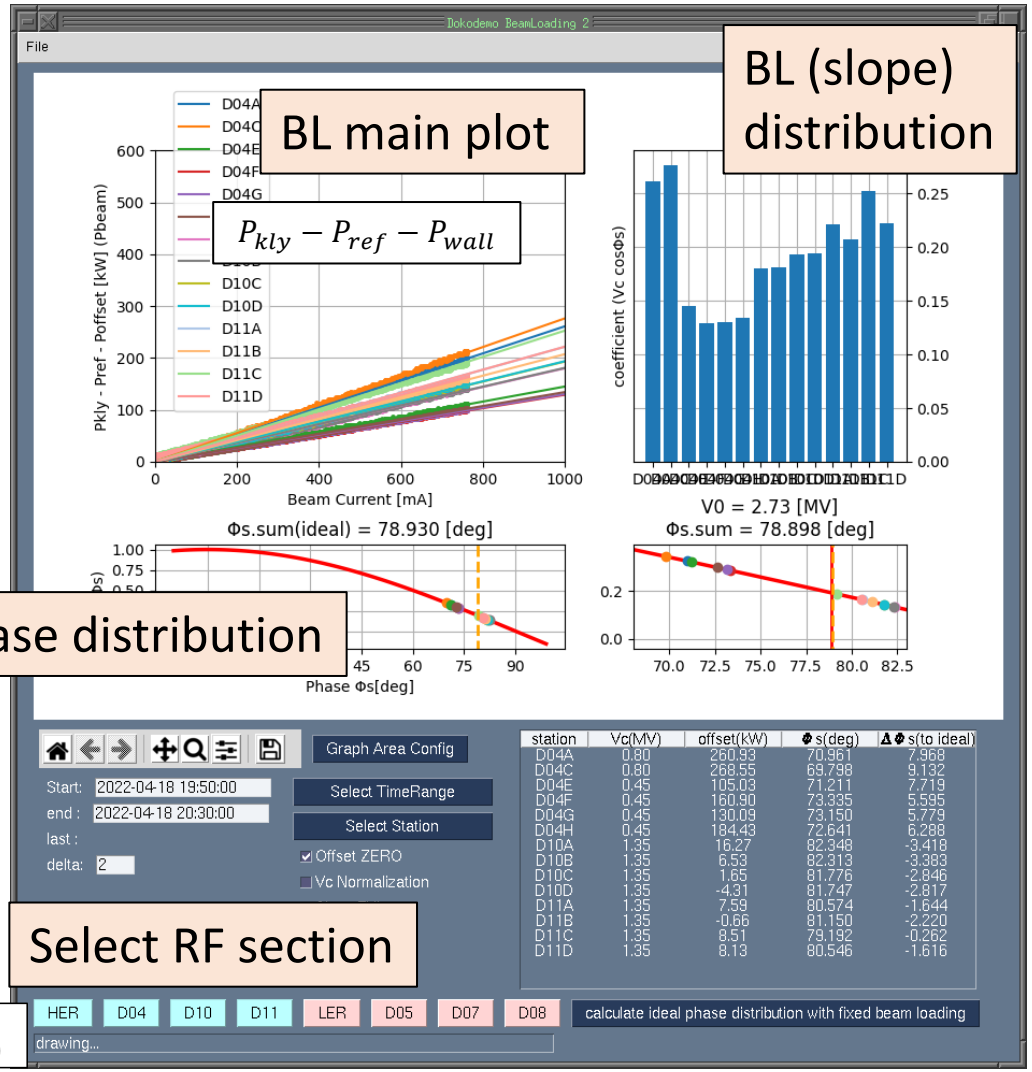

Beam loading optimization tool

Newly developed beam loading evaluation & optimization tool.

- Draw $P_{beam} - I_{beam}$ plot at specified time period.
  (Usually, during stacking beam current.)
- In the main plot, vertical axis is selectable:
  - $P_{kly} - P_{ref}$ $(= P_{beam} + P_{wall}(= \text{offset}))$
  - $P_{kly} - P_{ref} - P_{wall}$ $(= P_{beam})$
  - $(P_{kly} - P_{ref} - P_{wall})/V_c$ (V_c-normalized P_{beam})

- Easy-to-read display of the slope and phase distribution.
- Developed by Python3 + PySimpleGUI

$$P_{beam} + P_{wall} = P_{kly} - P_{ref}$$

python™

PySimpleGUI™

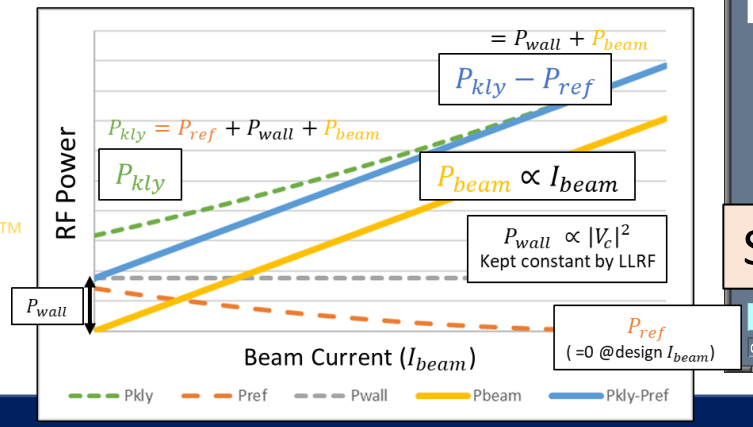

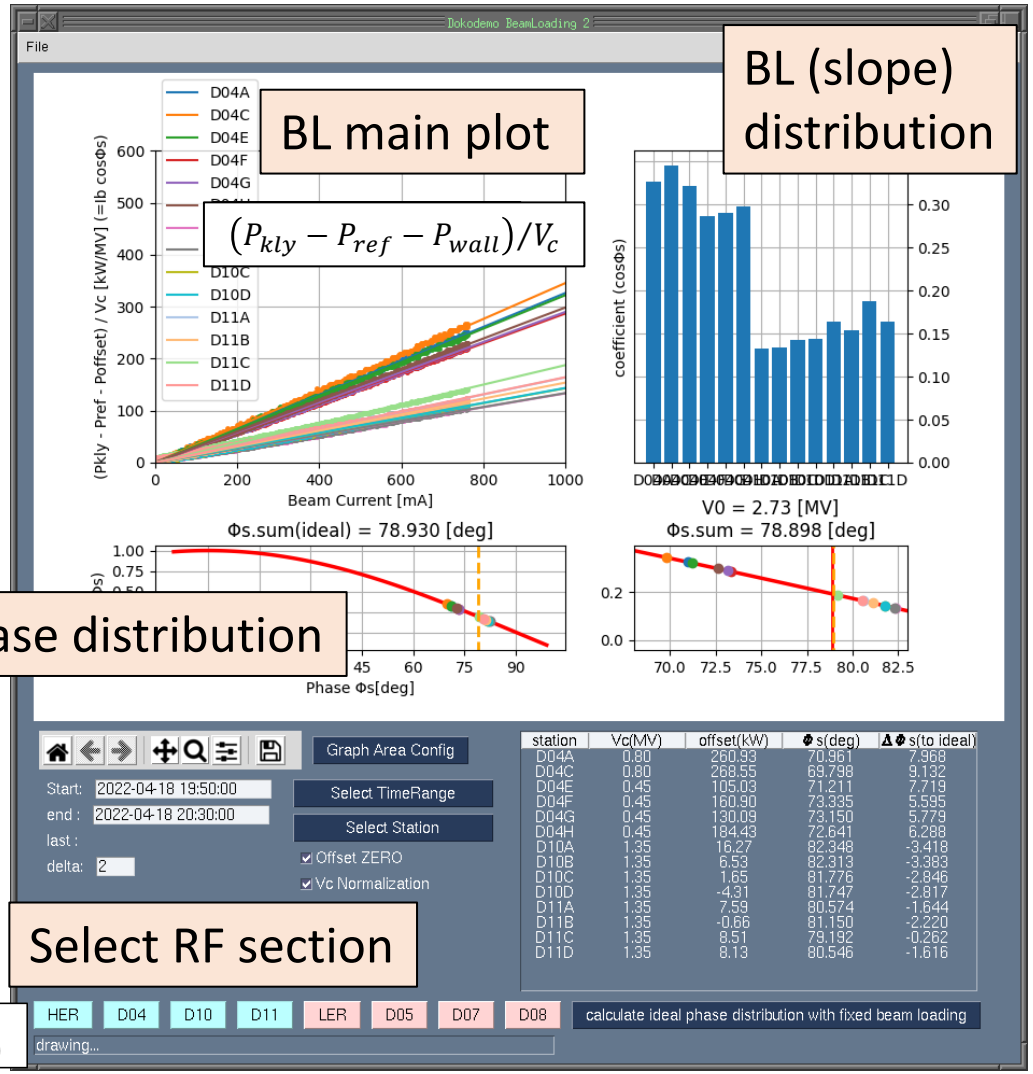

station	Vc(MV)	offset(kW)	Φs(deg)	ΔΦs(to ideal)
D04A	0.80	260.93	70.961	7.968
D04C	0.80	268.55	69.798	9.132
D04E	0.45	105.03	71.211	7.719
D04F	0.45	160.90	73.335	5.595
D04G	0.45	130.09	73.150	5.779
D04H	0.45	184.43	72.641	6.288
D10A	1.35	16.27	82.348	-3.418
D10B	1.35	6.53	82.313	-3.383
D10C	1.35	1.65	81.776	-2.846
D10D	1.35	-4.31	81.747	-2.817
D11A	1.35	7.59	80.574	-1.644
D11B	1.35	-0.66	81.150	-2.220
D11C	1.35	8.51	79.192	-0.262
D11D	1.35	8.13	80.546	-1.616

Beam loading optimization tool

$$V_0 = \sum_i^N V_i \cos\left(\underbrace{\phi_{tgt} + \Delta\phi_i}_{\phi_{acc}}\right)$$

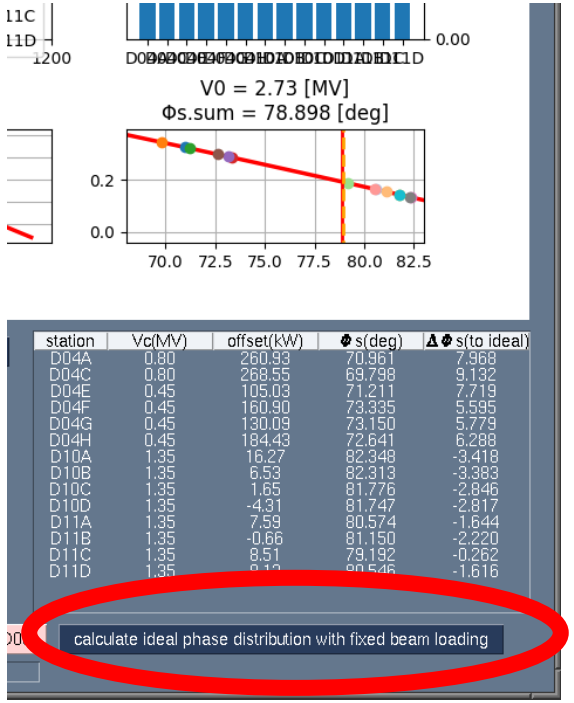

File

station	Vc(MV)	Φs(deg)	fix Φs	fix tgt(deg)	Phs ofst(deg)	new Φs(deg)	ΔΦs(deg)	power-ratio
D05A	0.45	75.764	☐		0	72.159	-3.604	1.24
D05B	0.45	74.923	☐		0	72.159	-2.763	1.17
D05C	0.45	75.308	☐		0	72.159	-3.148	1.20
D05D	0.45	75.424	☐		0	72.159	-3.264	1.21
D05E	0.45	74.764	☐		0	72.159	-2.604	1.16
D05F	0.45	74.612	☐		0	72.159	-2.452	1.15
D07A	0.84	74.108	☑	82	0	82	7.891	0.50
D07B	0.84	74.225	☑	82	0	82	7.775	0.51
D07D	0.44	74.411	☐		0	72.159	-2.251	1.14
D07E	0.88	76.891	☐		3	75.159	-1.731	1.12
D08A	0.88	76.358	☐		3	75.159	-1.198	1.08
D08B	0.84	75.572	☐		3	75.159	-0.412	1.02
D08C	0.44	75.258	☐		0	72.159	-3.098	1.20
D08D	0.42	84.057	☑	84	0	84	-0.057	1.00
D08E	0.84	85.065	☑	85	0	85	-0.064	1.01

Re-calc

Beam loading optimization tool

$$V_0 = \sum_i^N V_i \cos\left(\underbrace{\phi_{tgt} + \Delta\phi_i}_{\phi_{acc}}\right)$$

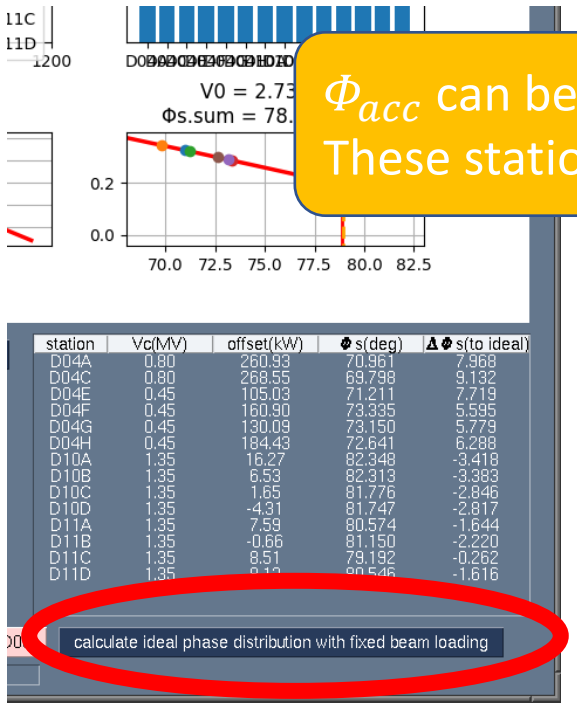

Φ_{acc} can be also specified arbitrary value!
These station's voltages are deducted from V_0.

Φ_{acc}
(obtained from the plot)

Specification of phase difference
($\Delta\phi_i$)

File

station	Vc(MV)	Φs(deg)	fix Φs	fix tgt(deg)	Phs ofst(deg)	new Φs(deg)	ΔΦs(deg)	power-ratio
D05A	0.45	75.764	☐		0	72.159	-3.604	1.24
D05B	0.45	74.923	☐		0	72.159	-2.763	1.17
					0	72.159	-3.148	1.20
					0	72.159	-3.264	1.21
					0	72.159	-2.604	1.16
					0	72.159	-2.452	1.15
D07A			☑	82	0	82	7.891	0.50
D07B	0.84	74.225	☑	82	0	82	7.775	0.51
D07D	0.44	74.411	☐		0	72.159	-2.251	1.14
D07E	0.88	76.891	☐		3	75.159	-1.731	1.12
D08A	0.88	76.358	☐		3	75.159	-1.198	1.08
D08B	0.84	75.572	☐		3	75.159	-0.412	1.02
D08C	0.44	75.258	☐		0	72.159	-3.098	1.20
D08D	0.42	84.057	☑	84	0	84	-0.057	1.00
D08E	0.84	85.065	☑	85		85	-0.064	1.01

Re-calc

Calculated target phase
($\phi_{tgt} + \Delta\phi_i$)

Correction amount
for phase shifter

Example of beam loading adjustment

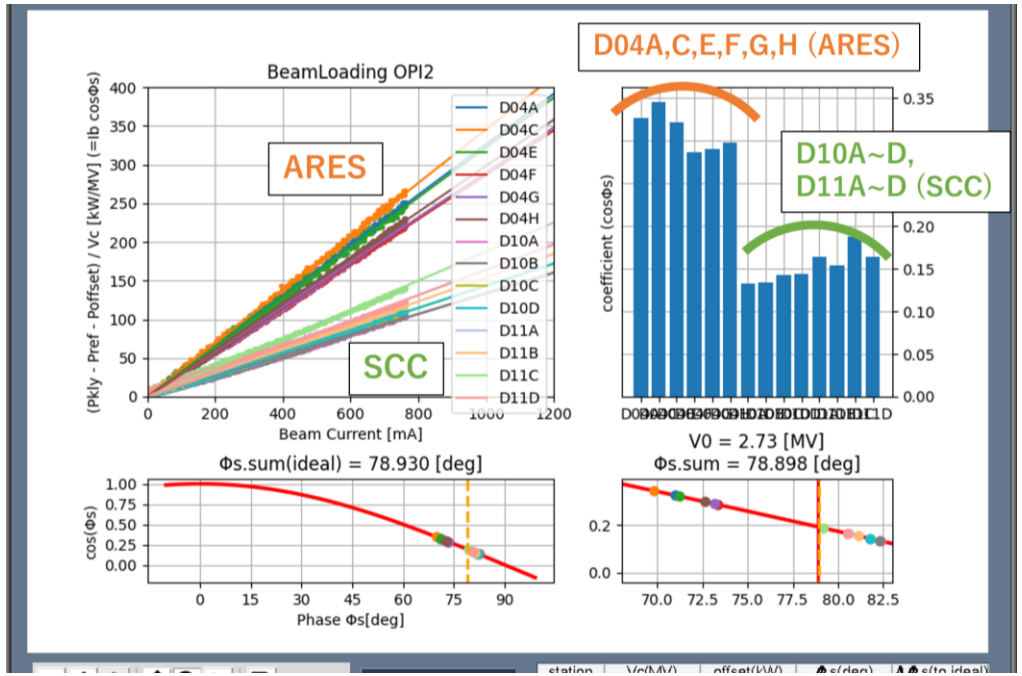

Beam loading of HER on one day.

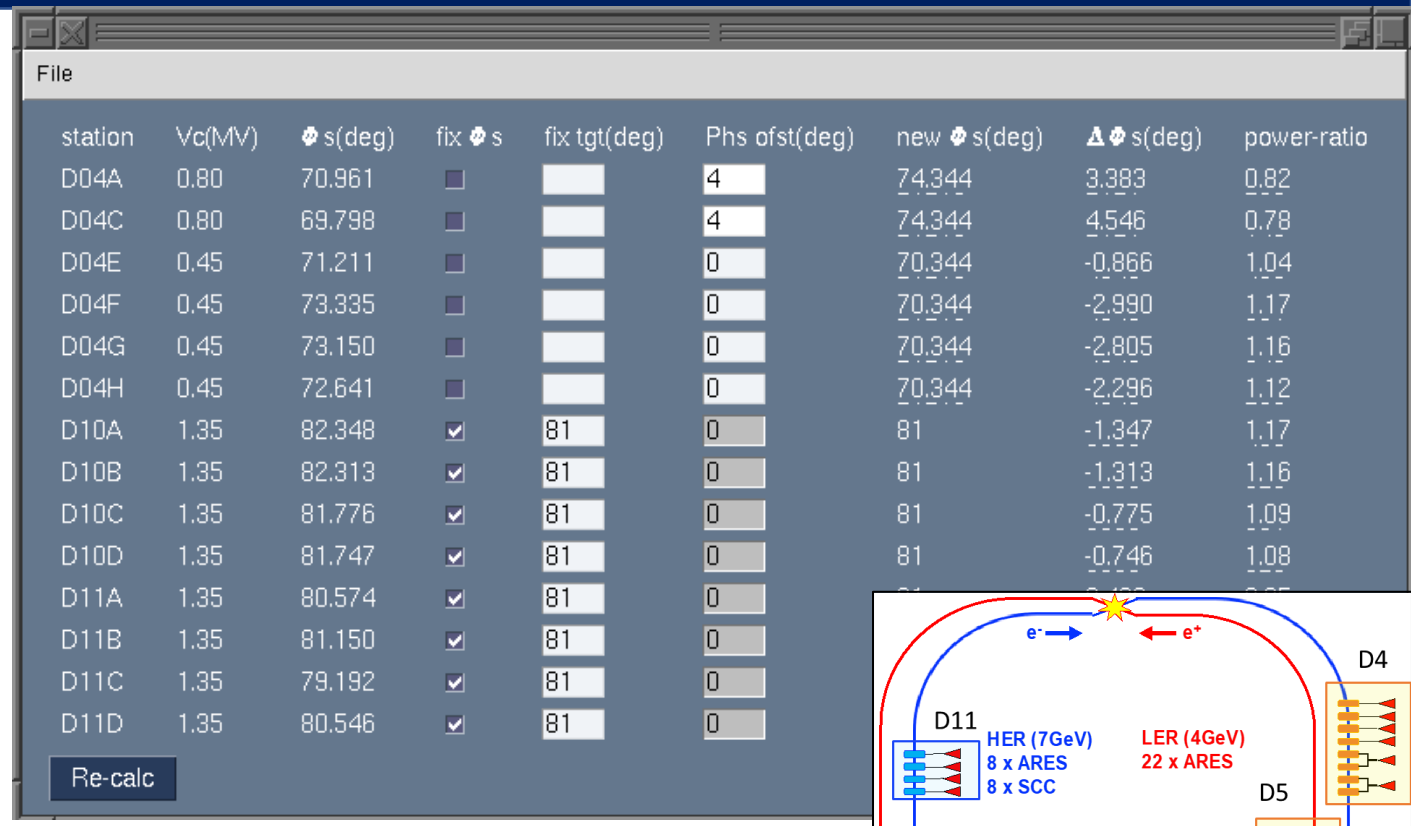

File

station	Vc(MV)	Φs(deg)	fix Φs	fix tgt(deg)	Phs ofst(deg)	new Φs(deg)	ΔΦs(deg)	power-ratio
D04A	0.80	70.961	☐		4	74.344	3.383	0.82
D04C	0.80	69.798	☐		4	74.344	4.546	0.78
D04E	0.45	71.211	☐		0	70.344	-0.866	1.04
D04F	0.45	73.335	☐		0	70.344	-2.990	1.17
D04G	0.45	73.150	☐		0	70.344	-2.805	1.16
D04H	0.45	72.641	☐		0	70.344	-2.296	1.12
D10A	1.35	82.348	☑	81	0	81	-1.347	1.17
D10B	1.35	82.313	☑	81	0	81	-1.313	1.16
D10C	1.35	81.776	☑	81	0	81	-0.775	1.09
D10D	1.35	81.747	☑	81	0	81	-0.746	1.08
D11A	1.35	80.574	☑	81	0			
D11B	1.35	81.150	☑	81	0			
D11C	1.35	79.192	☑	81	0			
D11D	1.35	80.546	☑	81	0			

Re-calc

difference between ARES 1:1 and 1:2 was not considered before adjustment.

- 2x “ARES 1:2” (D04A,D04C)
- 4x “ARES 1:1” (D04E,F,G,H)
- 8 x “SCC” (D10A~D, D11A~D)

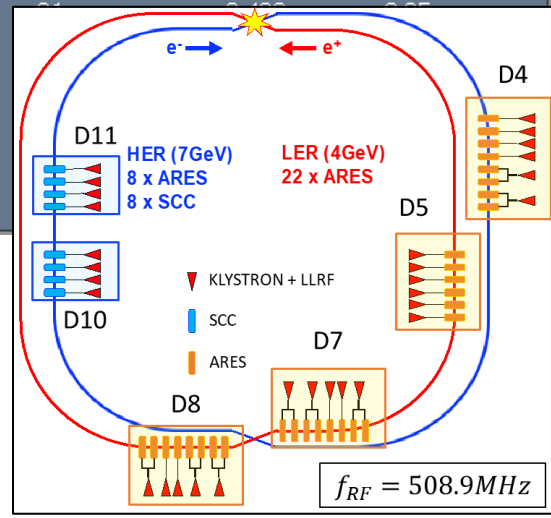

Example of beam loading adjustment

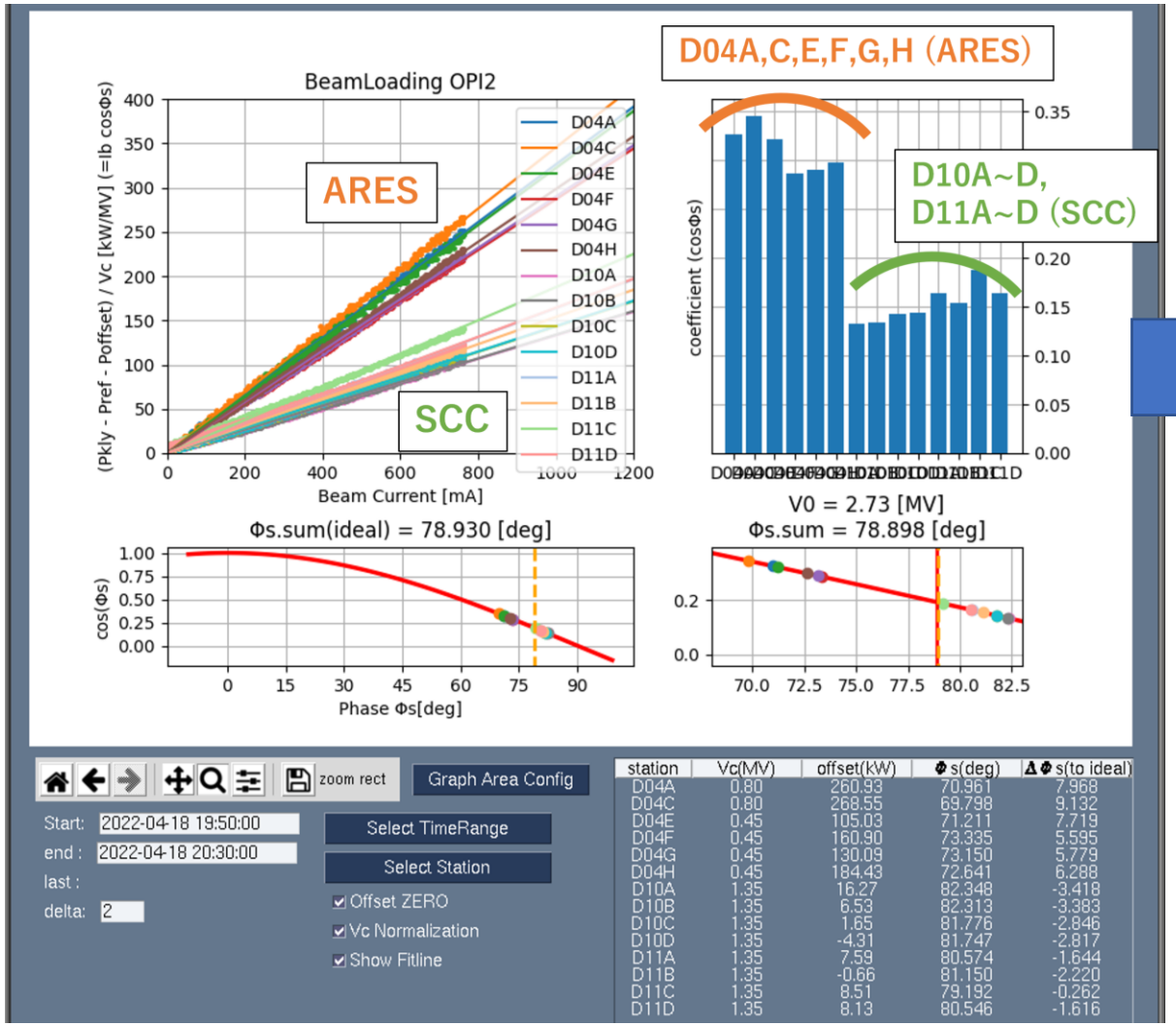

station	Vc(MV)	offset(kW)	Φs(deg)	ΔΦs(to ideal)
D04A	0.80	260.93	70.961	7.968
D04C	0.80	268.55	69.798	9.132
D04E	0.45	105.03	71.211	7.719
D04F	0.45	160.90	73.335	5.595
D04G	0.45	130.09	73.150	5.779
D04H	0.45	184.43	72.641	6.288
D10A	1.35	16.27	82.348	-3.418
D10B	1.35	6.53	82.313	-3.383
D10C	1.35	1.65	81.776	-2.846
D10D	1.35	-4.31	81.747	-2.817
D11A	1.35	7.59	80.574	-1.644
D11B	1.35	-0.66	81.150	-2.220
D11C	1.35	8.51	79.192	-0.262
D11D	1.35	8.13	80.546	-1.616

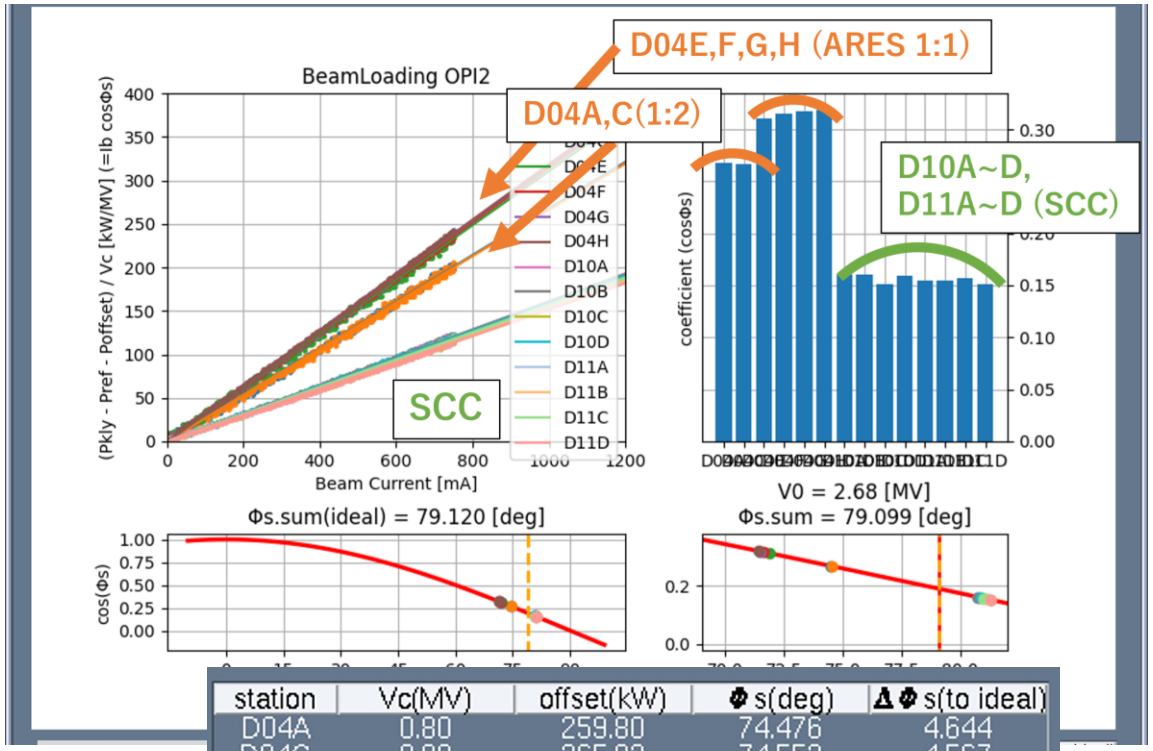

station	Vc(MV)	offset(kW)	Φs(deg)	ΔΦs(to ideal)
D04A	0.80	259.80	74.476	4.644
D04C	0.80	265.93	74.553	4.567
D04E	0.45	105.65	71.891	7.228
D04F	0.45	160.25	71.651	7.469
D04G	0.45	129.09	71.488	7.631
D04H	0.45	184.85	71.429	7.690
D10A	1.35	14.36	80.792	-1.672
D10B	1.35	5.96	80.752	-1.633
D10C	1.35	1.14	81.273	-2.154
D10D	1.35	-4.95	80.870	-1.751
D11A	1.35	17.42	81.124	-2.005
D11B	1.35	1.57	81.094	-1.974
D11C	1.35	19.96	80.975	-1.856
D11D	1.35	18.29	81.278	-2.158

Example of beam loading adjustment

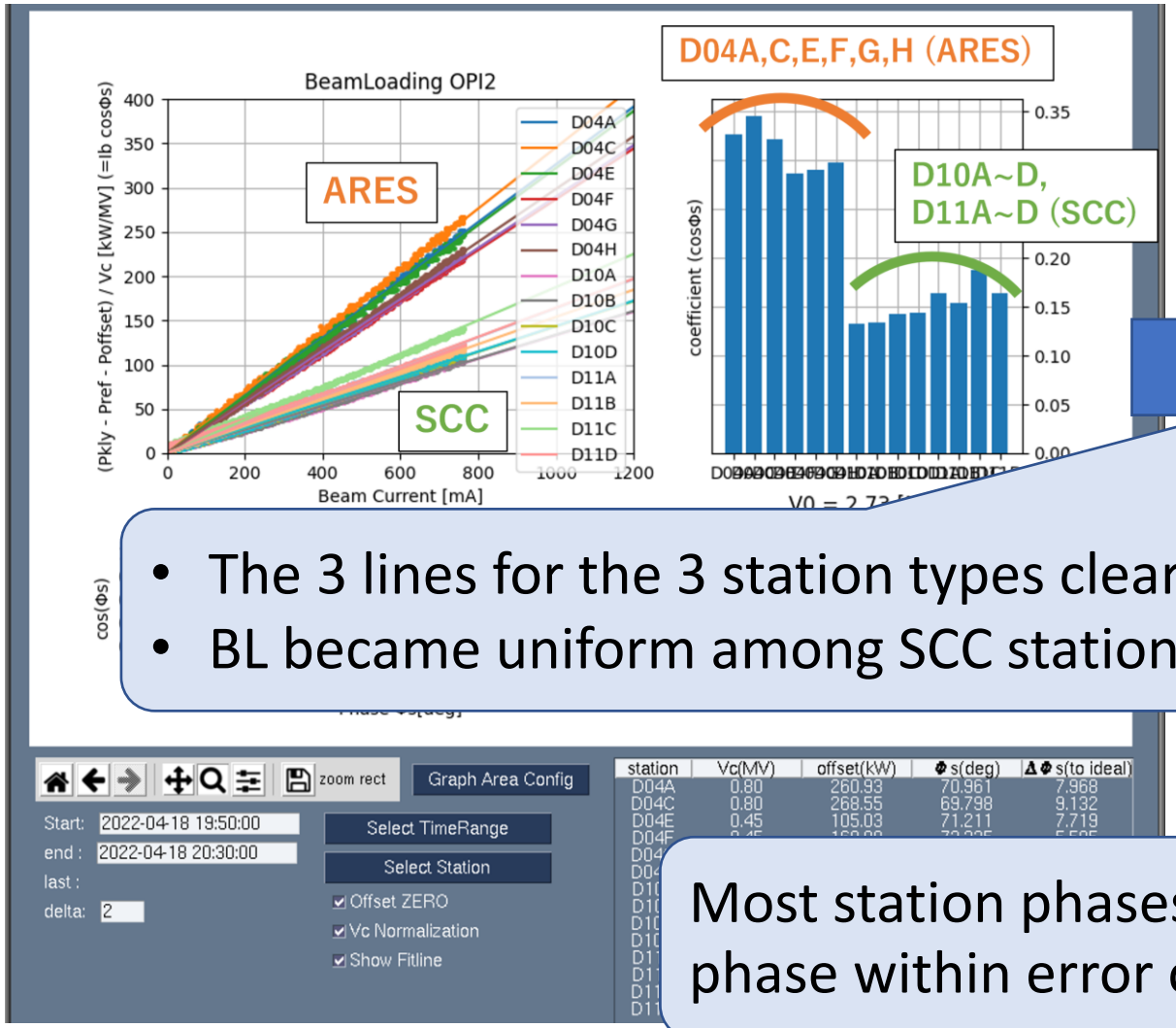

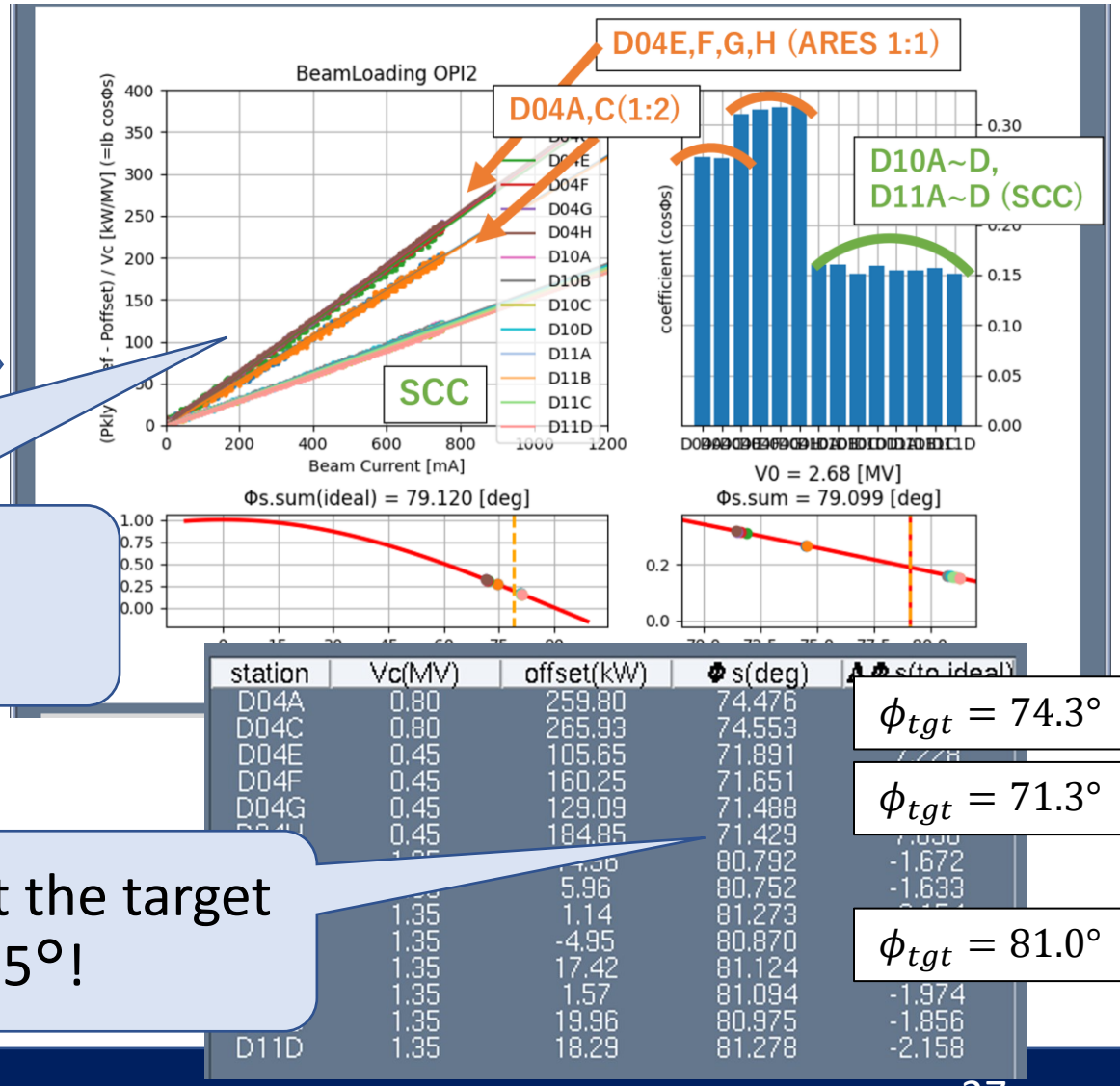

- The 3 lines for the 3 station types clearly.
- BL became uniform among SCC stations.

Most station phases get the target phase within error of 0.5°!

$\phi_{tgt} = 74.3°$

$\phi_{tgt} = 71.3°$

$\phi_{tgt} = 81.0°$

Example of beam loading adjustment

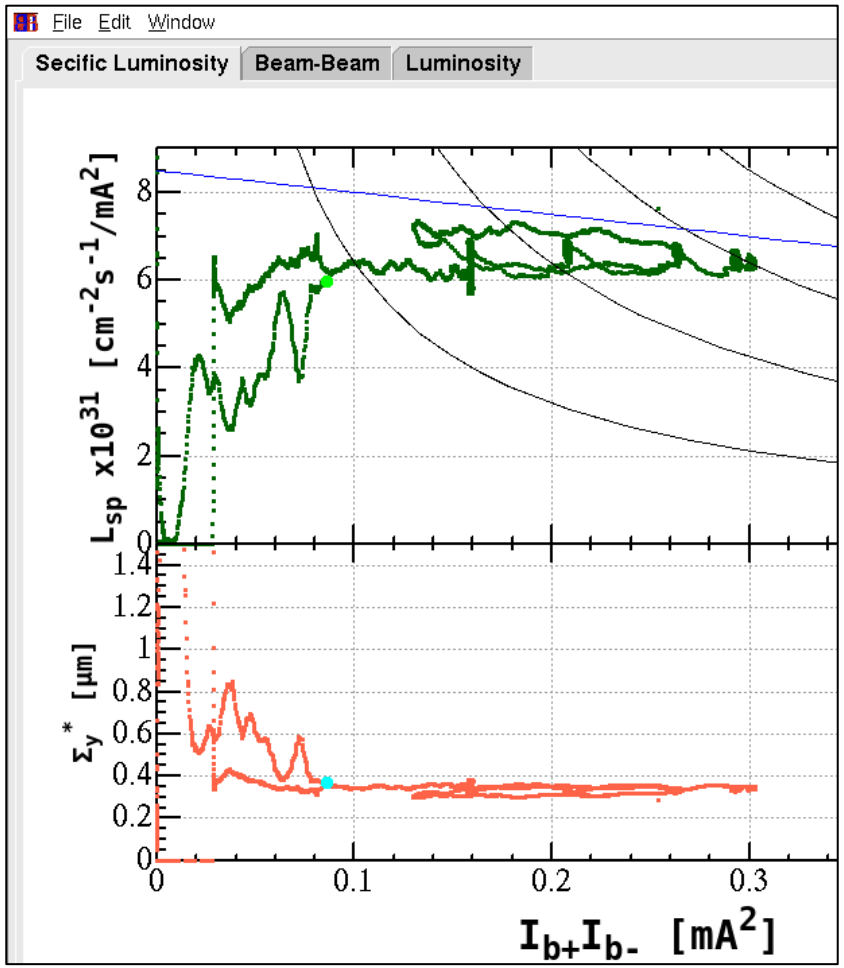

Before

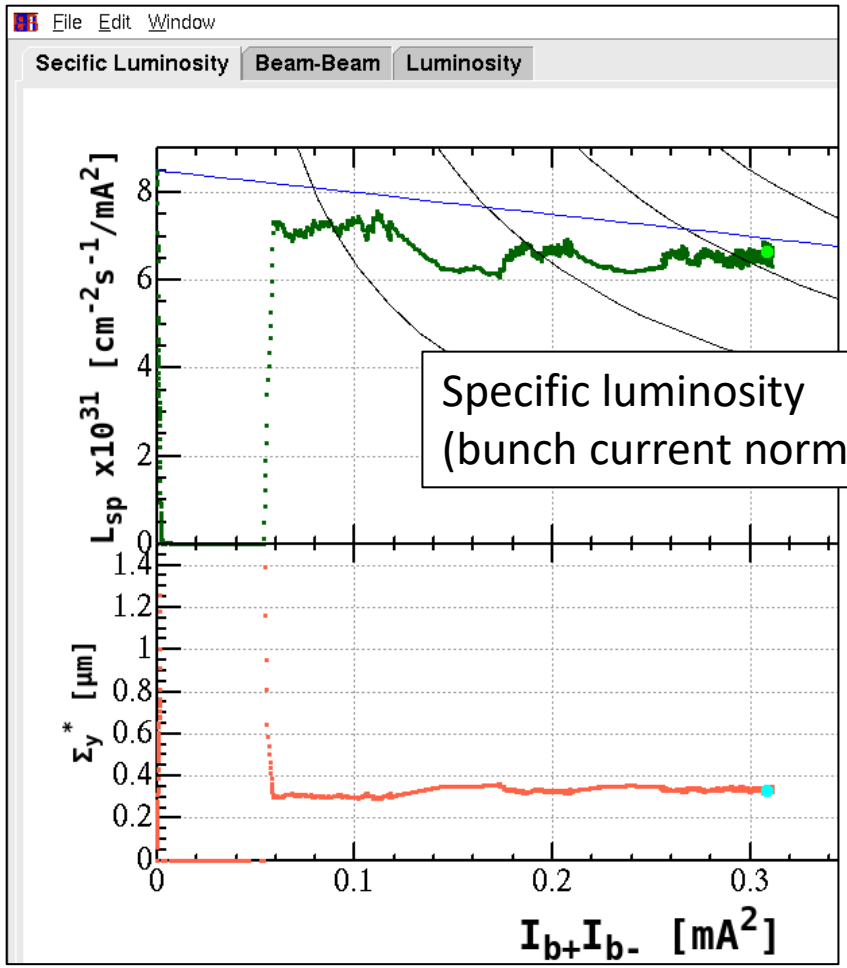

After

Specific luminosity
(bunch current normalized luminosity)

No significant change was found in the luminosity before / after the adjustment!

Summary

- We established a method to evaluate and optimize the beam loading balance among RF stations.
- The evaluation can be made in a simple procedure using only RF power measurements and other parameters that are easy to know.
- The evaluation and adjustment are essential to store high current beam and to achieve high luminosity.
- The adjustment tool can give other advantages for beam stability, failure detection, and other beam studies.

- In the next step, we want to automate this procedure to keep ideal beam loading distribution.

backup

Other possible method of phase evaluation

How to evaluate acceleration phase?

- Use Cavity Pickup?

  SuperKEKB has 3km circumference (1km diameter)

  How to compare phase between cavities that 1km apart?

  How to determined the phase based on beam pass timing?

  → **almost impossible.**

  * At the start of operation,
  this adjustment is necessary to align adjacent cavity phases.

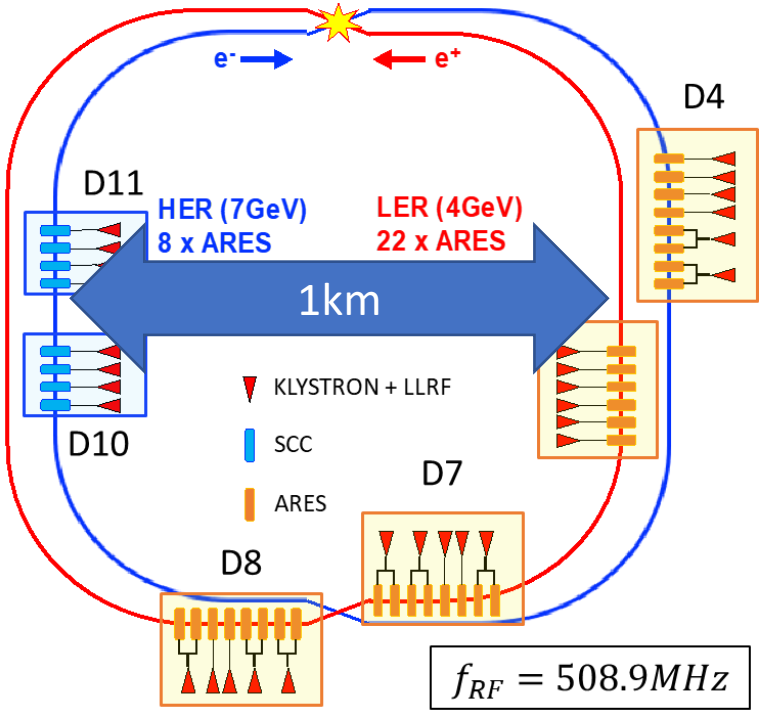

- See the synchrotron oscillation frequency?

  Scan all station phase one-by-one? ⇒ **Spends much time.**

  And it is **incompatible with the physics run.**

Upgrade plan of RF system

Original slide: K.Akai

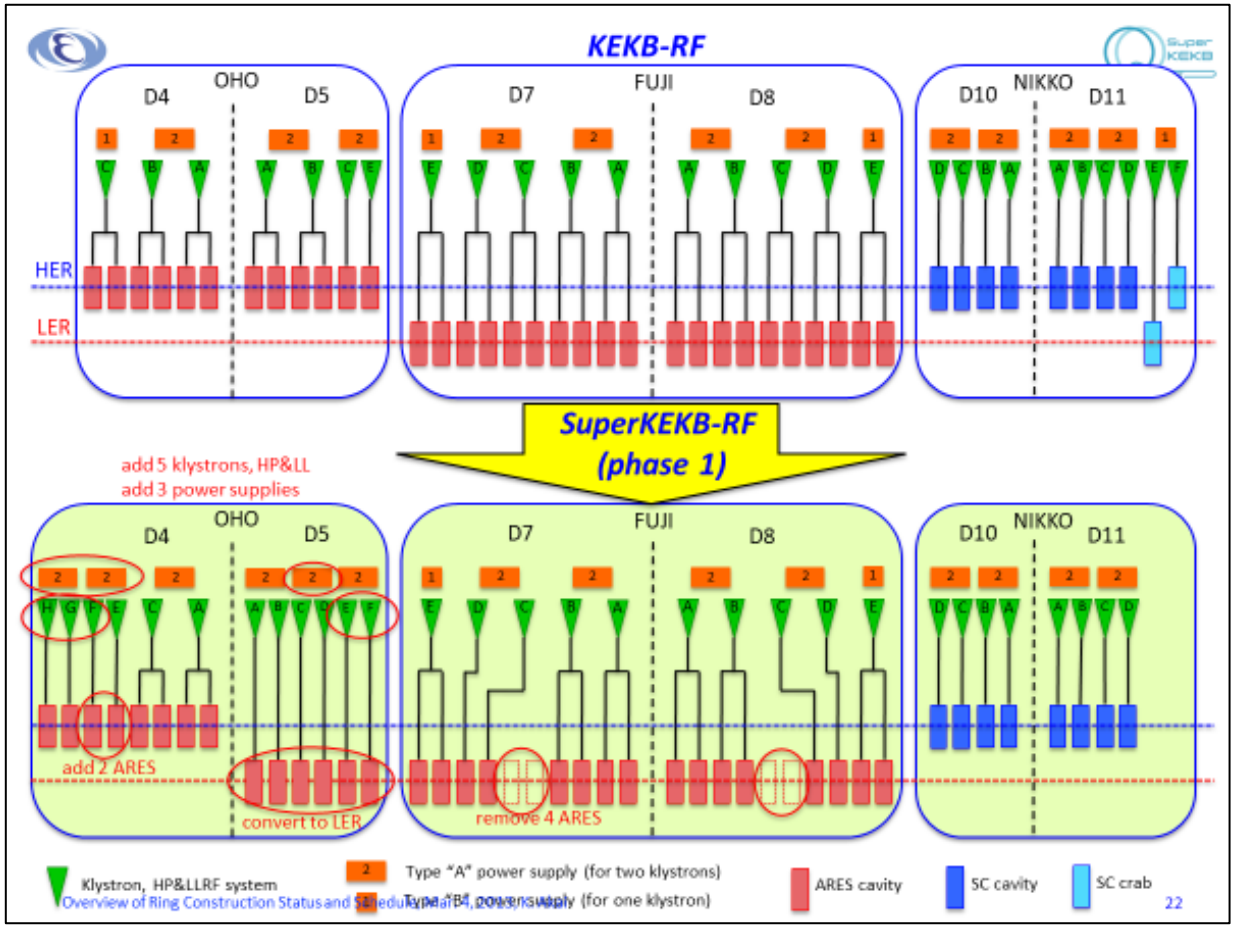

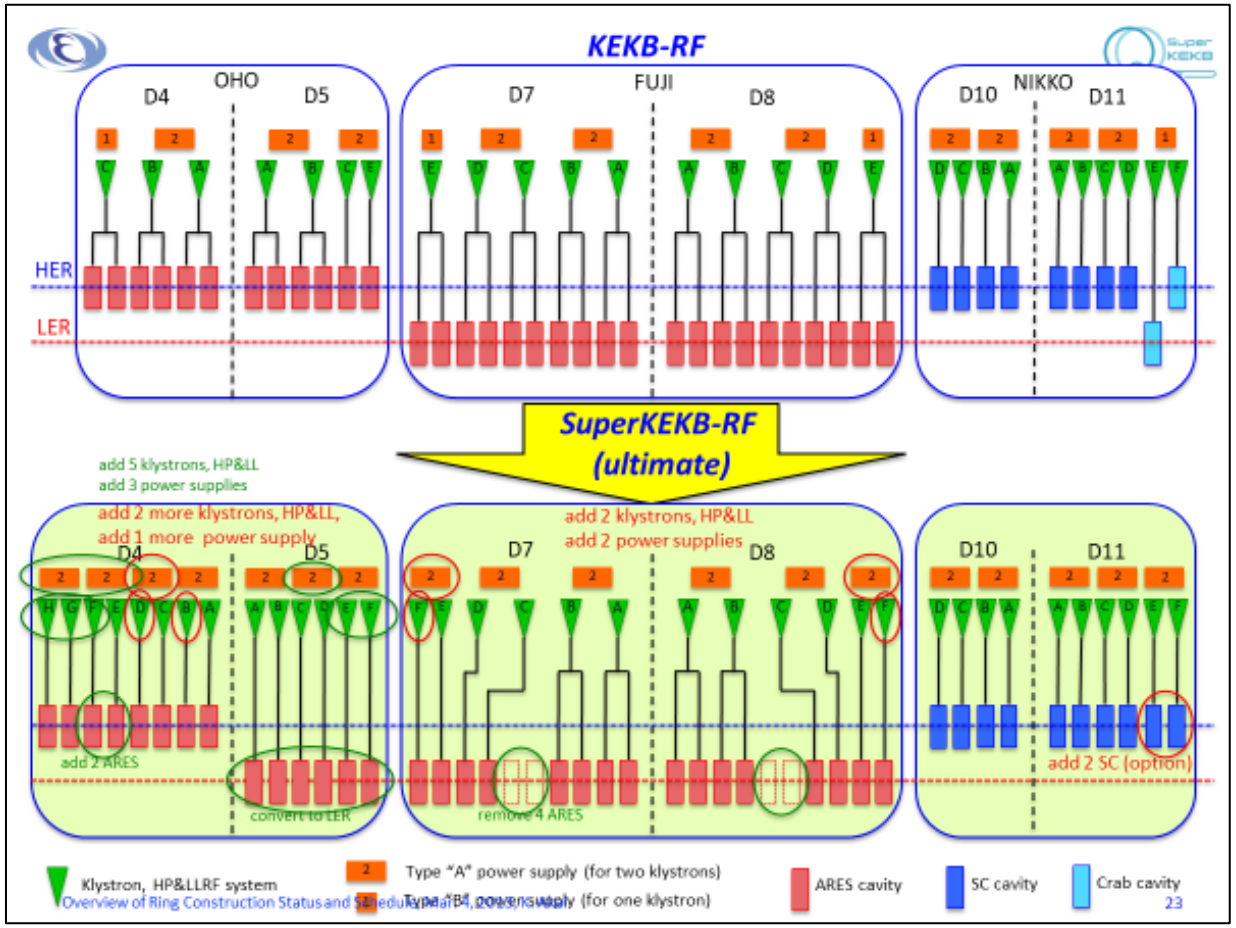

To reach design beam current 2.6A in HER,
augmentation to "Ultimate" configuration (add KLY & PS in D4 section) is necessary.

Upgrade plan of RF system

Parameter	KEKB (achieved)				SuperKEKB (design)				SuperKEKB (achieved)				
Ring	HER			LER	HER		LER		HER			LER	
Energy [GeV]	8.0			3.5	7.0		4.0		7.0			4.0	
Beam Current [A]	1.4			2	**2.6**		**3.6**		**1.14**			**1.46**	
Number of Bunches	1585			1585	2500		2500		2346			2346	
Bunch Length [mm]	6-7			6-7	**5**		6		~6			~6	
Total Beam Power [MW]	~5.0			~3.5	8.0		8.3		~3.1			~3.2	
Total RF Voltage [MV]	15.0			8.0	15.8		9.4		14.2			9.12	
	ARES		SCC	ARES	ARES	SCC	ARES		ARES		SCC	ARES	
Number of Cavities	10	2	8	20	8	8	8	14	4	4	8	12	10
Klystron : Cavity	1:2	1:1	1:1	1:2	1:1	1:1	1:2	1:1	1:2	1:1	1:1	1:2	1:1
RF Voltage [MV/Cav.]	0.5		1.5	0.5	0.5	1.5	0.5		0.45		1.35	0.45	
Beam Power [kW/Cav.]	200	550	400	200	**600**	400	200	**600**	130	170	260	190	230

Example of applications – fault detection

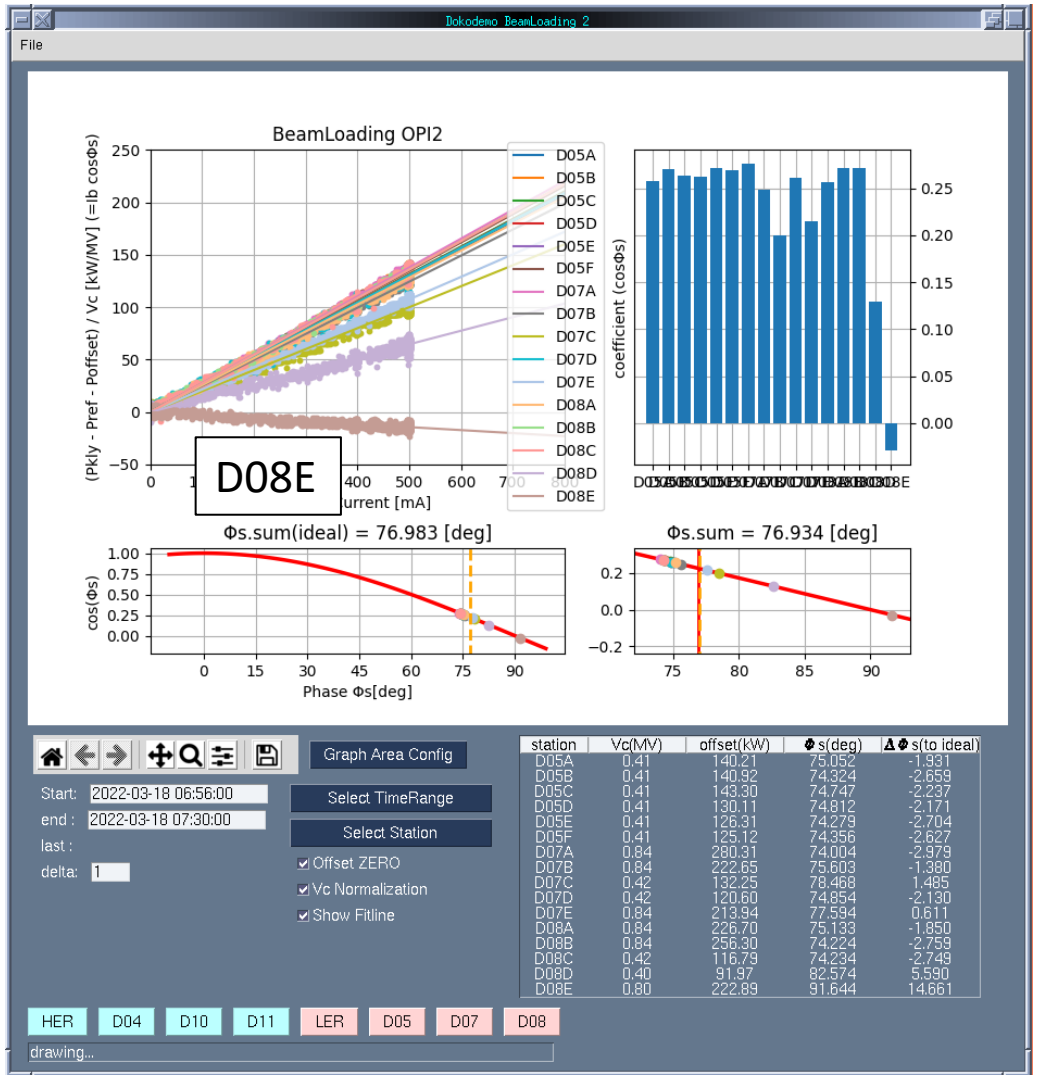

D08E station phase (ϕ_{acc}) was set to 85°
(to minimize beam loading)
due to cavity vacuum condition.

→ After small earthquake, D08E phase jumped to 91°
(deceleration phase!)

Thanks to the tool, we noticed this phase jump quickly!

* According to investigation after this event,
a certain RF cable was abnormally sensitive for outer force.

Example of applications - for study

Vc-Transient with Two Bunch Gap in HER

M. Nishiwaki
T. Kobayashi

HER ARES (D04F)

$\Delta f \sim -74.5$[kHz](including -5°offset)

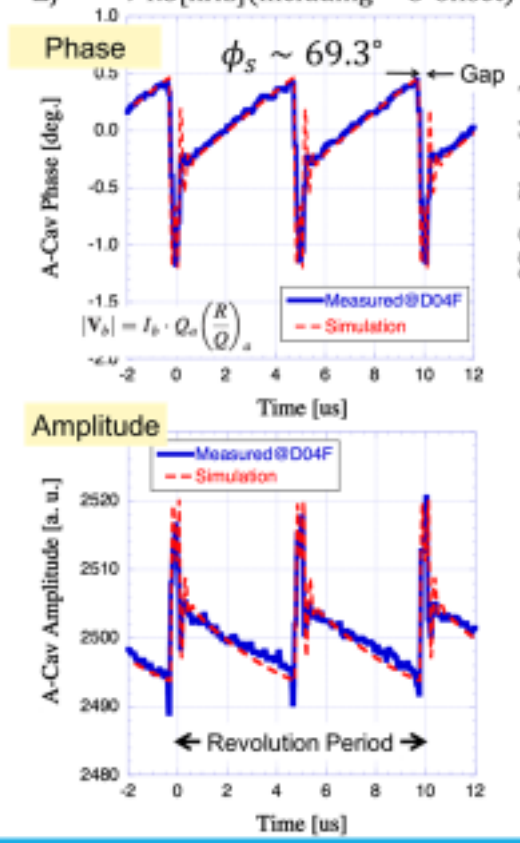

HER SCC Vc (only simulation)

$\Delta f \sim -14.4$[kHz](including -8°offset)

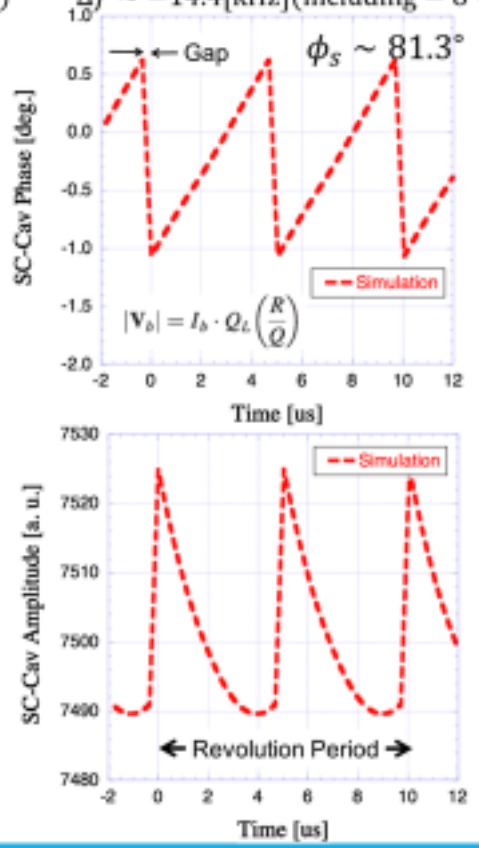

Beam Curren : 800mA

Vector Sum of SCC & ARES from simulation data

SCC(Vc=1.35MV) x 8 + ARES (Vc=0.45) x 8
with 10-deg phase difference between SCC&ARES

Assuming that all cavities are operated with the same condition for SCC and ARES, respectively

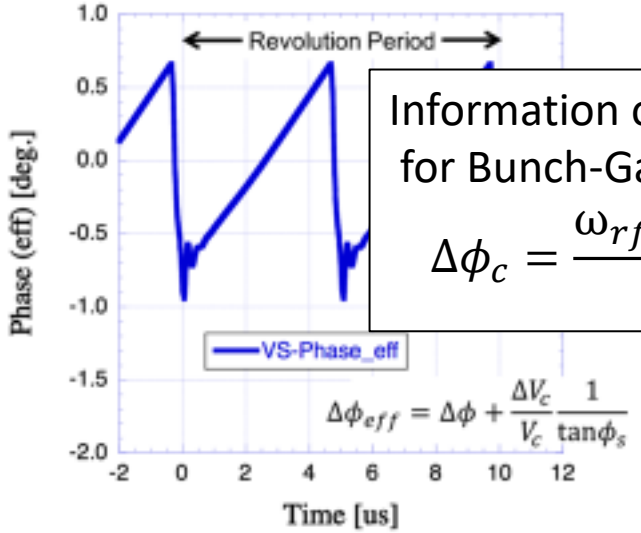

Plot shows the effective phase including Vc-change for beam phase.

Information of ϕ_s are contributed for Bunch-Gap Transient simulation

$$\Delta\phi_c = \frac{\omega_{rf} I_{beam} \sin\phi_s}{2V_c}\frac{R_{sh}}{Q_0}\Delta t_g$$

Vc-Transient in 2021 operation

M. Nishiwaki

Working Status of RF System

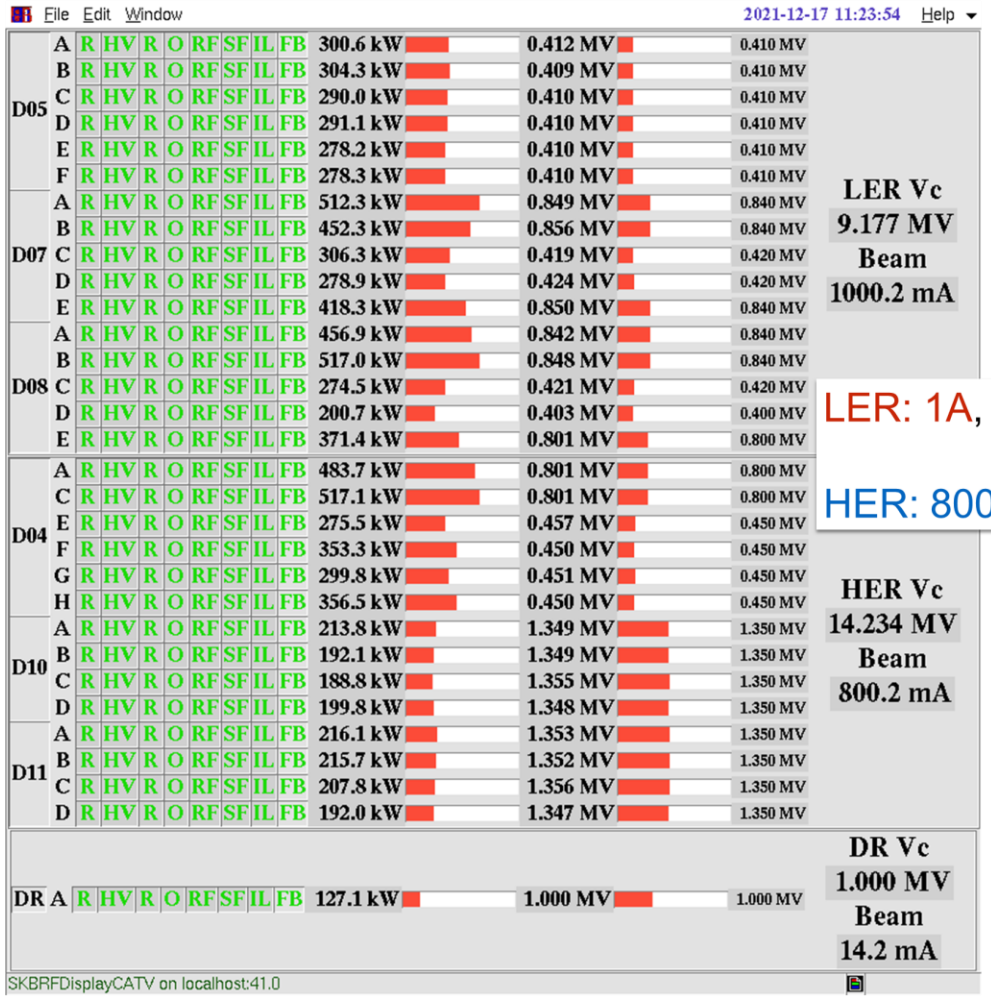

LER: 1A,

HER: 800mA

Beam Loading (Op. Conditions)

$$P_b = I_b V_c \cos\phi_s$$
$$= P_{kly} - P_r - P_c$$

LER

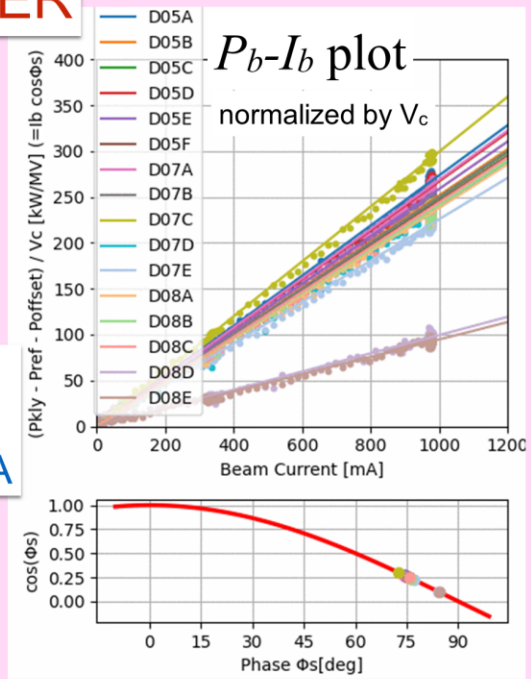

ARES (D05A)

$\phi_s \sim 74.1°$

$\Delta f_{opt} \sim -89.5$[kHz]
(for A-cav)

HER

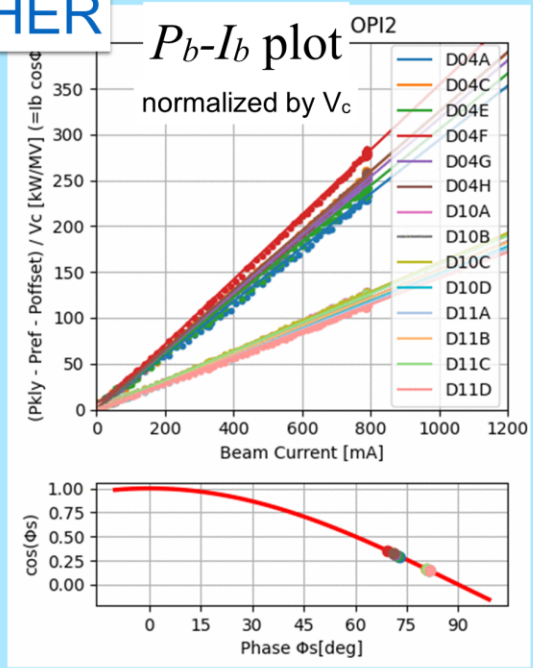

ARES (D04F)

$\phi_s \sim 69.3°$ $\Delta f_{opt} \sim -63.5$[kHz]
(for A-cav)

SCC

$\phi_s \sim 81.3°$ $\Delta f_{opt} \sim -13.9$[kHz]

ARES : Accelerator Resonantly coupled to Energy Storage

Unique cavity specialized for KEKB

T. Abe

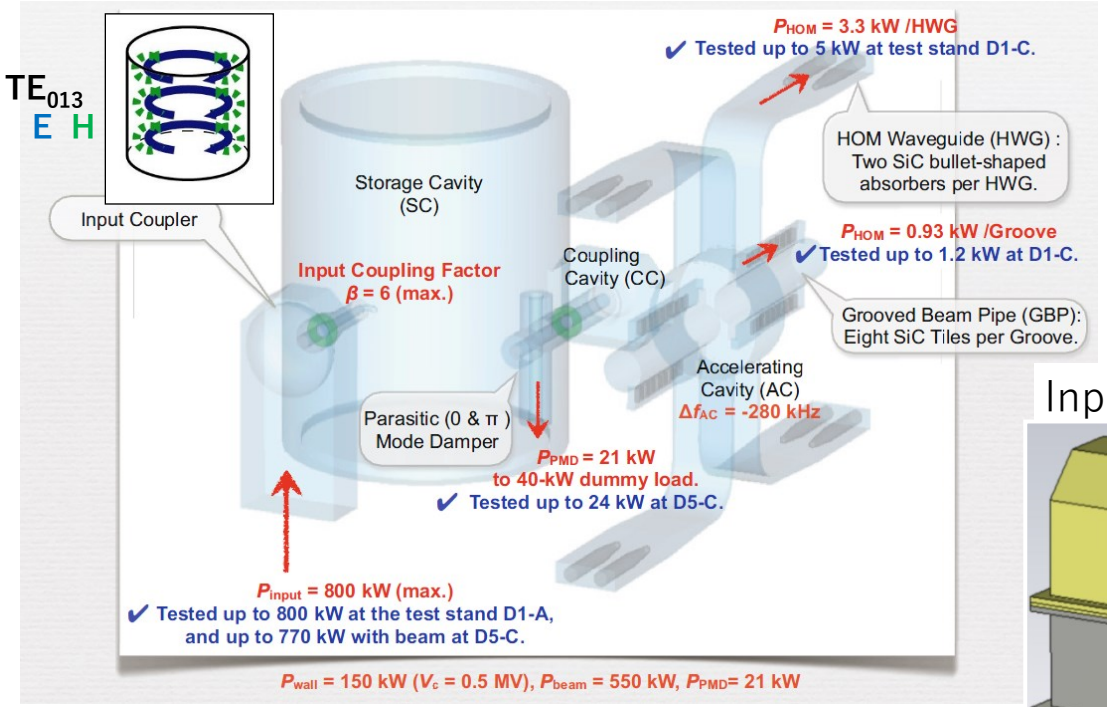

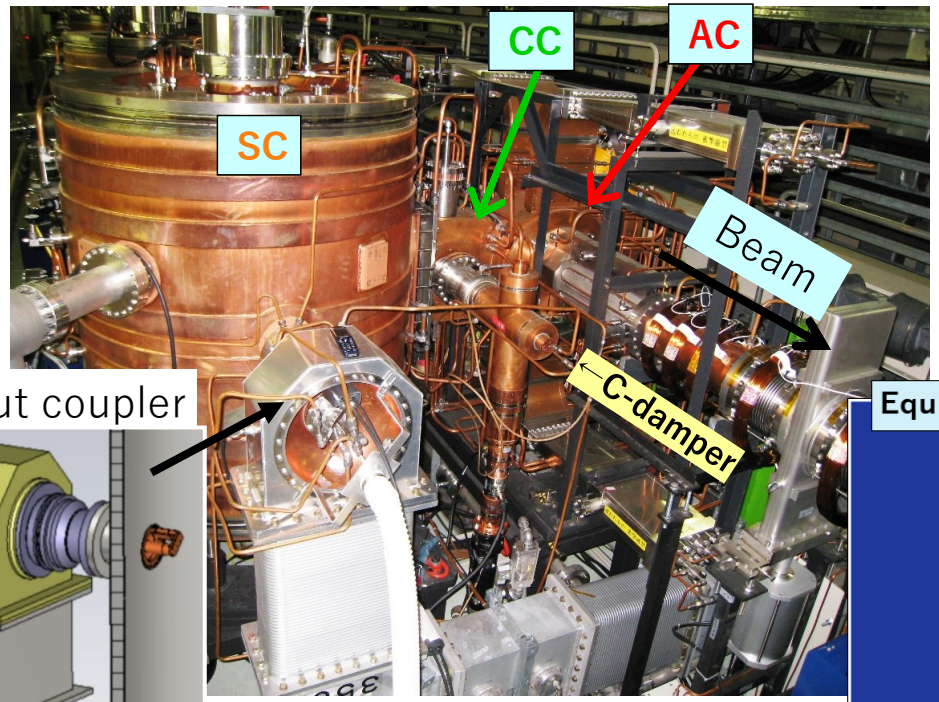

Input coupler

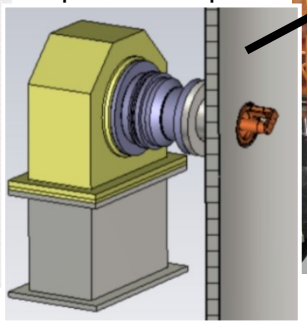

Parameters	
Freq.	509 MHz
R_{sh}/Q_0	15Ω
Q_0	~1.1x10^5
$V_{c\ (spec.)}$	0.5MV/cav.
P_{wall}	150kW

(60kW in AC, 90kW in SC)

Equivalent mechanical model

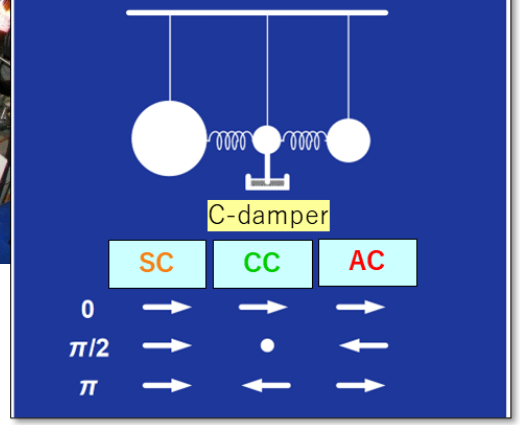

■Three-cavity system is stabilized with **π/2 mode** operation

- ➢SC has large stored energy : $U_{sc}/U_{ac} = 9$
- ➢Optimum detuning of $f_{\pi/2}$ is reduced as $\Delta f_{\pi/2} = \Delta f_{ac}/(1 + U_{sc}/U_{ac})$
- ➢CBIs driven by the accelerating mode is suppressed.

- ➢Parasitic 0 and π modes can be damped selectively out of CC by an antenna-type damper.

■**Cavity trip rate** ≈ 0.5/cavity/4 months (during 2022ab operation) for the 30 ARES cavities

- ➢**No significant change since the KEKB era.**
- ➢**Very stable for beam operation so far**

SCC

- 509 MHz Nb Single-cell HOM-damped Cavity, 4.4 K Operation
- 8 SCC Modules in HER (electron ring)
- Re-use of SRF system of KEKB
- Sharing the beam power and accelerating voltage with ARESs by giving phase-offset
- Main Issues in SuperKEKB for SCC
  - **Large HOM power** is expected due to twice high beam current and shorter bunch length.
    - **Additional SiC HOM damper**
  - Degradation of RF performance of Qo.
    - Horizontal High-Pressure Rinse

SuperKEKB-SCC Design Parameters	
Number of Cavities	8
Max. Beam Current [A]	2.6
RF Voltage [MV/cav.]	1.5
External Q	5E+4
Unloaded Q at 2MV	**1E+9**
Beam Loading [kW/cav.]	400
HOM Loading [kW/cav.]	**37**

Resent Operation Status (Trip rate)

- Very stable beam operation
- **Trip rate : 1.1/cavity/4 months(2022ab)**
  (except due to LLRF and High-power system)
- By discharging in cavity or input coupler and trouble of peripheral devices (chillers, tuners and so on)

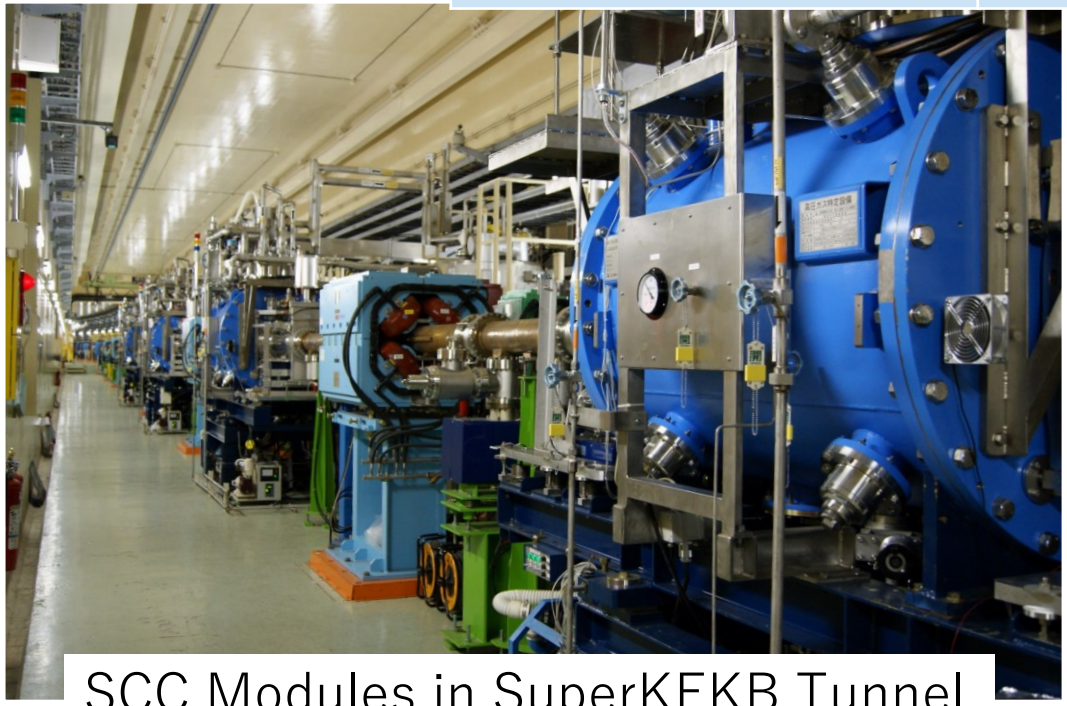

SCC Modules in SuperKEKB Tunnel

SCC Module of SuperKEKB

509 MHz Nb Single-cell Cavity
4.4 K Operation

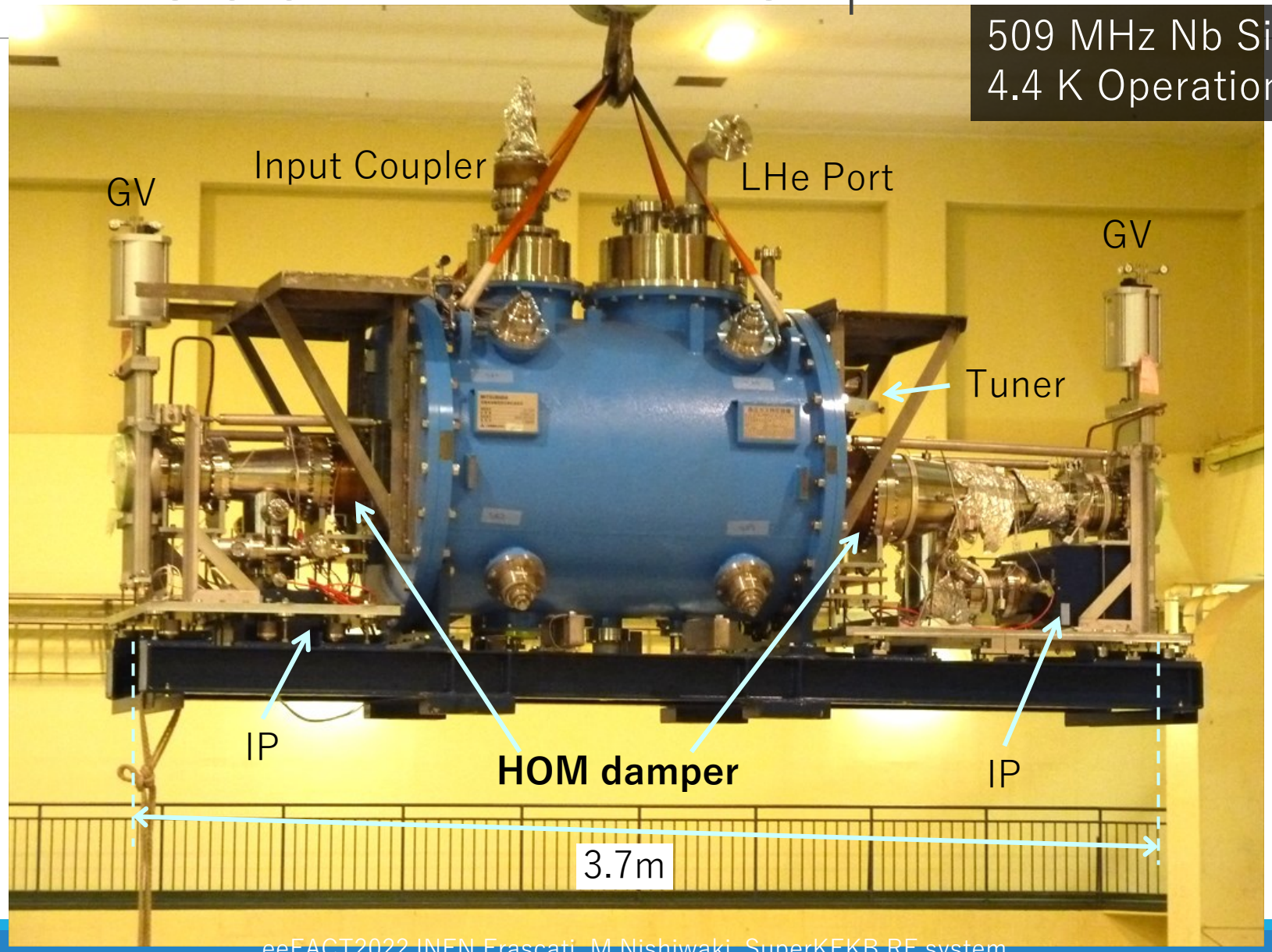

Operation Status of LLRF Control System

f_{rf}=508.9MHz

- Both of Superconducting (SCC) & Normal Conducting Cavities (the ARES cavity) are used.
- About 30 klystron stations are working in the 2 rings.

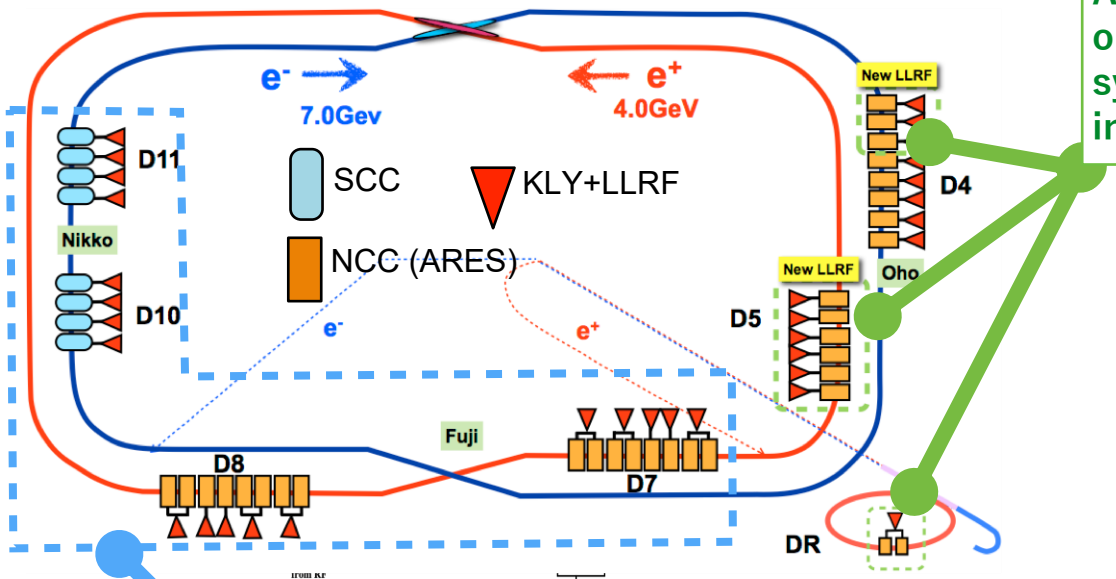

About 10 RF stations for ARES cavity are operated by μTCA-based digital LLRF systems. They are successfully working in high beam current operation.

The details have been already reported in this workshop before.

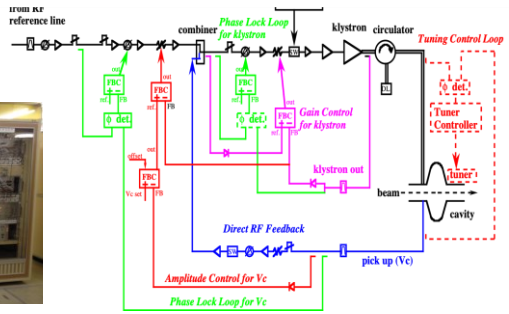

SCC

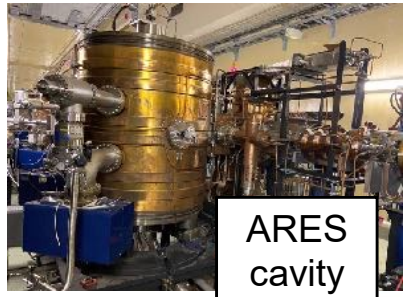

ARES cavity

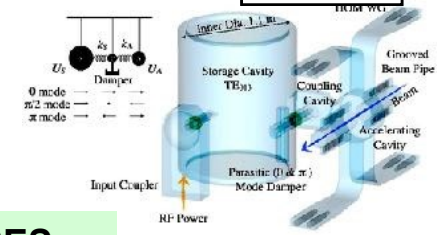

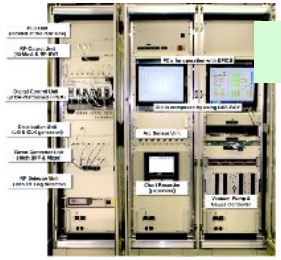

μTCA-based Digital LLRF for ARES

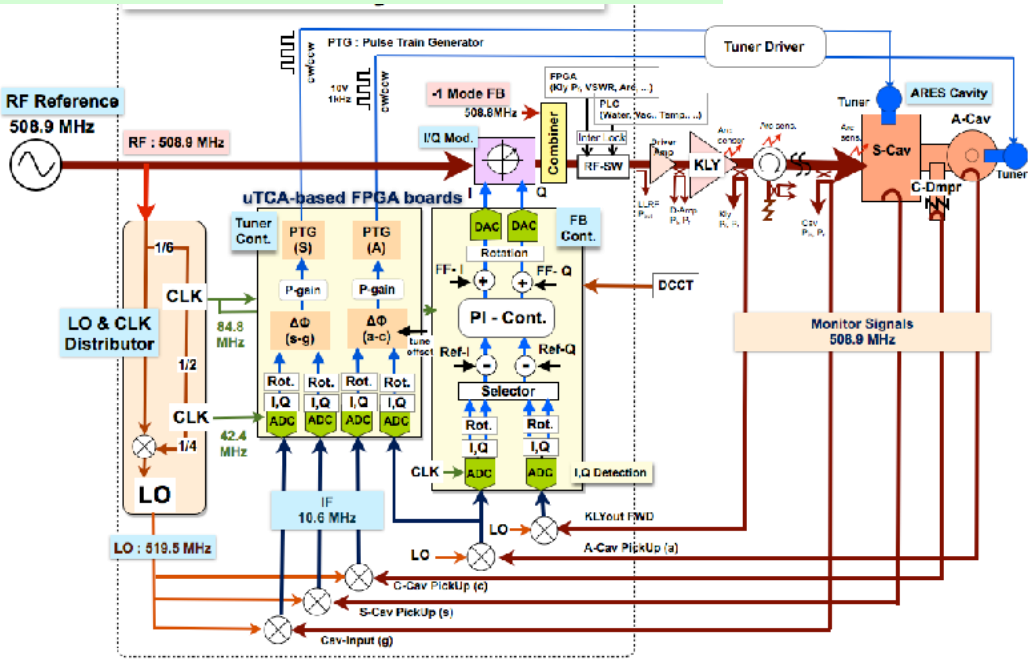

SCC stations and some ARES stations are still operated by old analog LLRF systems of KEKB (CAMAC is still used for remote control). Applying digital LLRF systems to all stations is still in the air due to insufficient budget.