Setup

Andreas Knecht
Paul Scherrer Institute

7. 11. 2022

muX setup

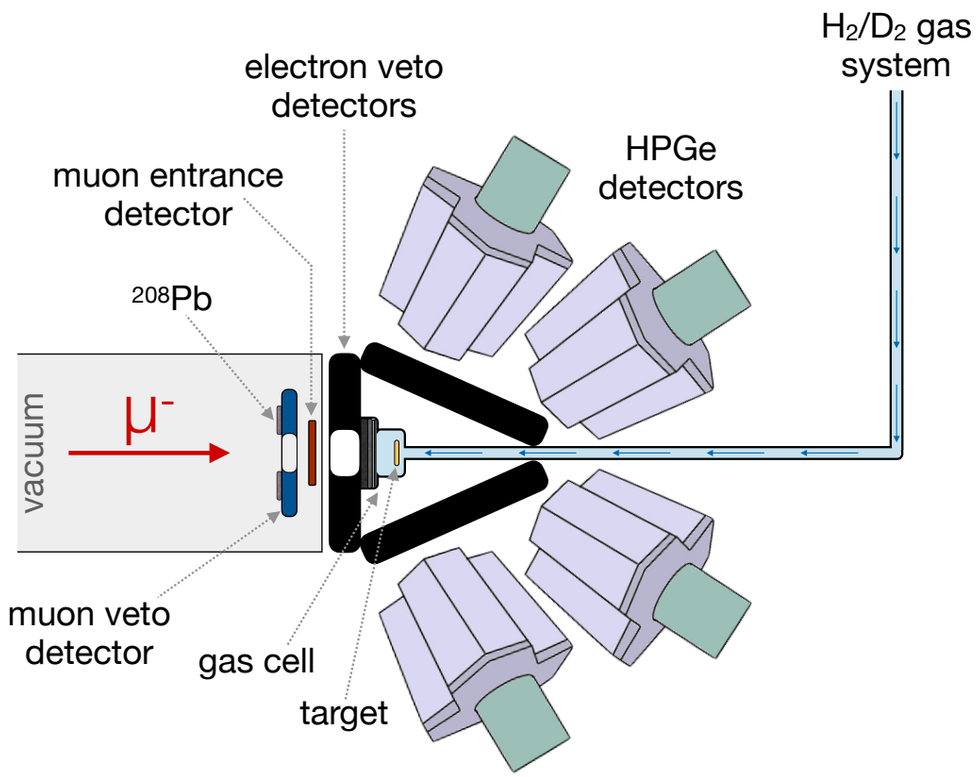

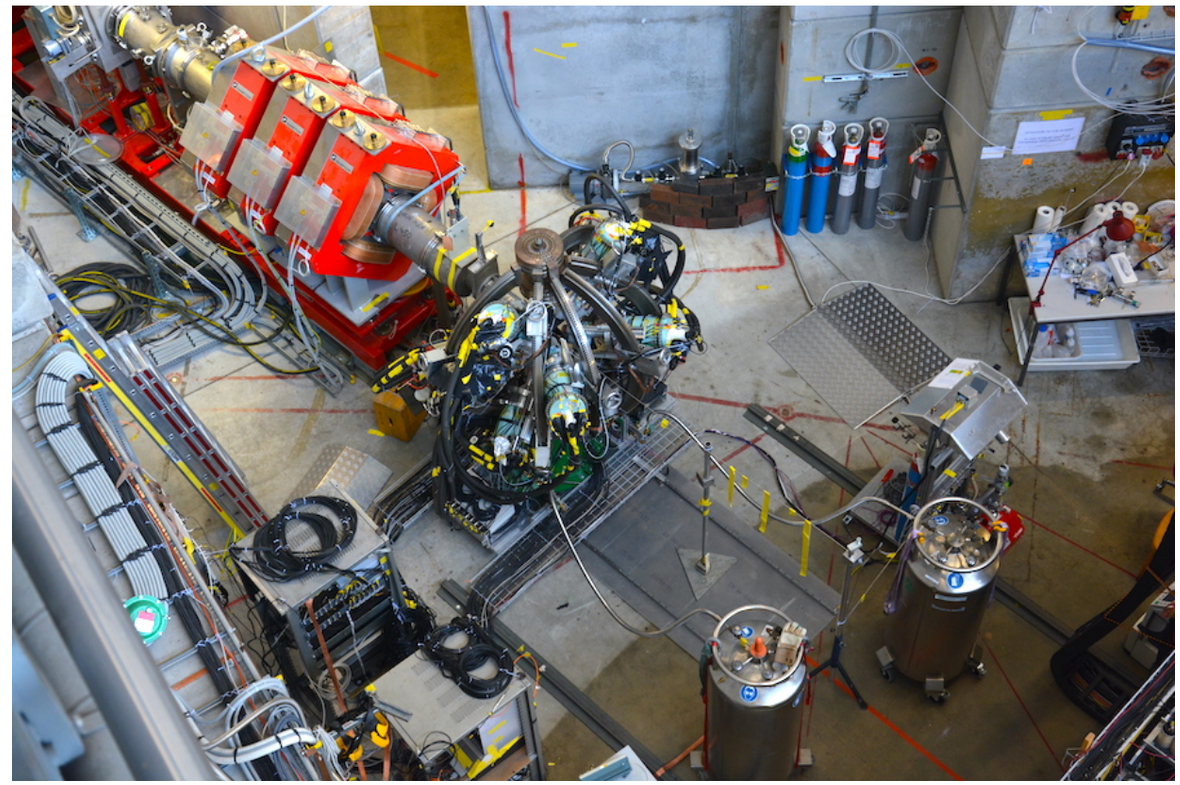

- muX as a basis for our setup

MMC setup

- Muon entrance and muon veto detectors
- Target vacuum chamber with thin windows towards detectors (order tens of um mylar)
- Flat target, angled detectors to minimise absorption towards both sides
- Auxiliary detectors on opposite side to MMC detector: low-energy germanium, SDD, etc.

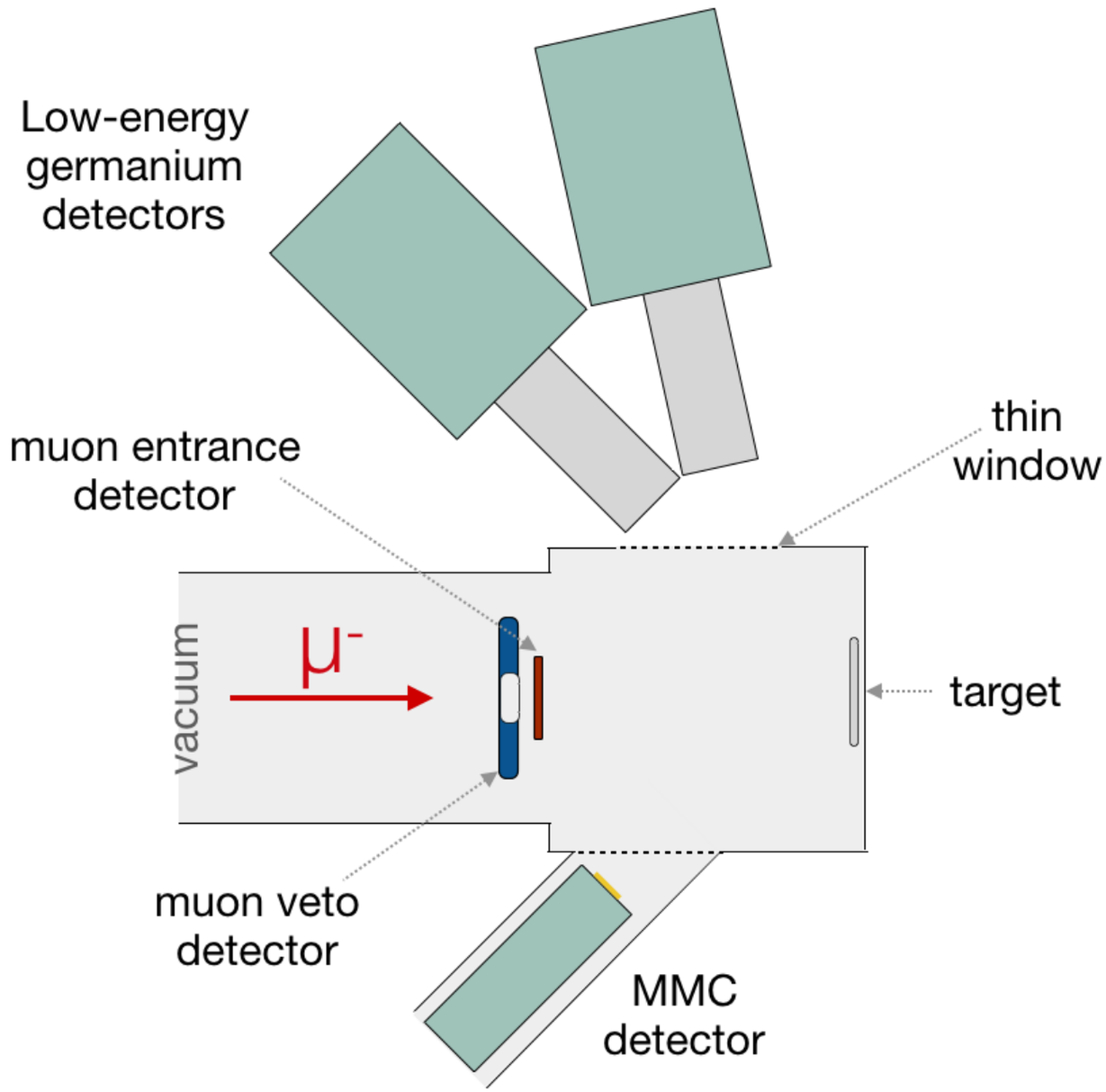

MMC setup II

- Especially for lithium, lock system with linear feedthrough to bring in targets
- Could also bring in other materials to calibrate with muons, e.g. muonic carbon x rays, or suitable materials to irradiate with x-ray tube
- X-ray tube mounted from below
- Need to be extra careful about the choice of materials that the muons can impinge on

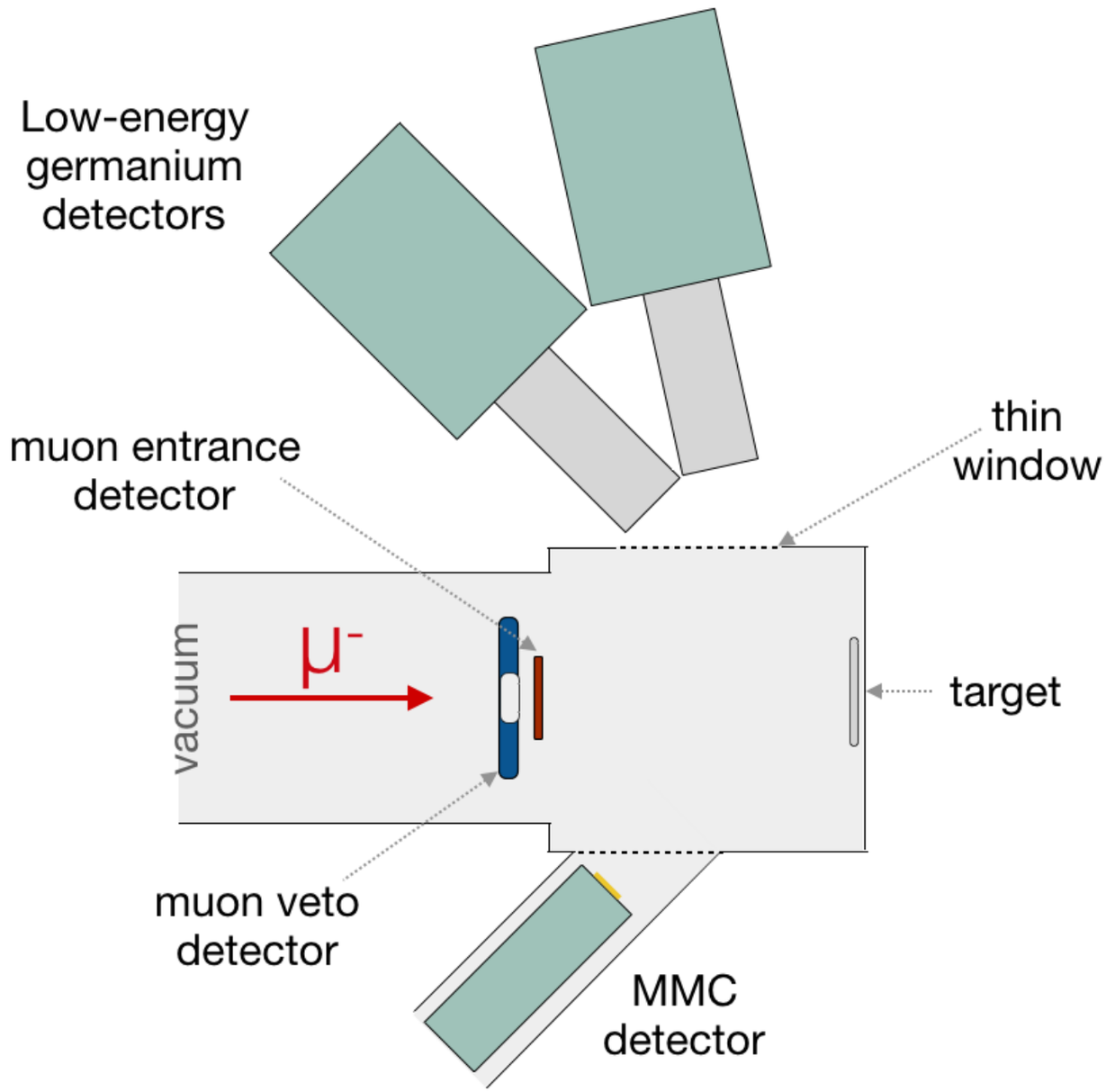

Backgrounds

- Even with the superb resolution of microcalorimeters we will have some overlaps, unidentified peaks, …
- Hard to predict all the lines including electronic x rays and lines after nuclear capture

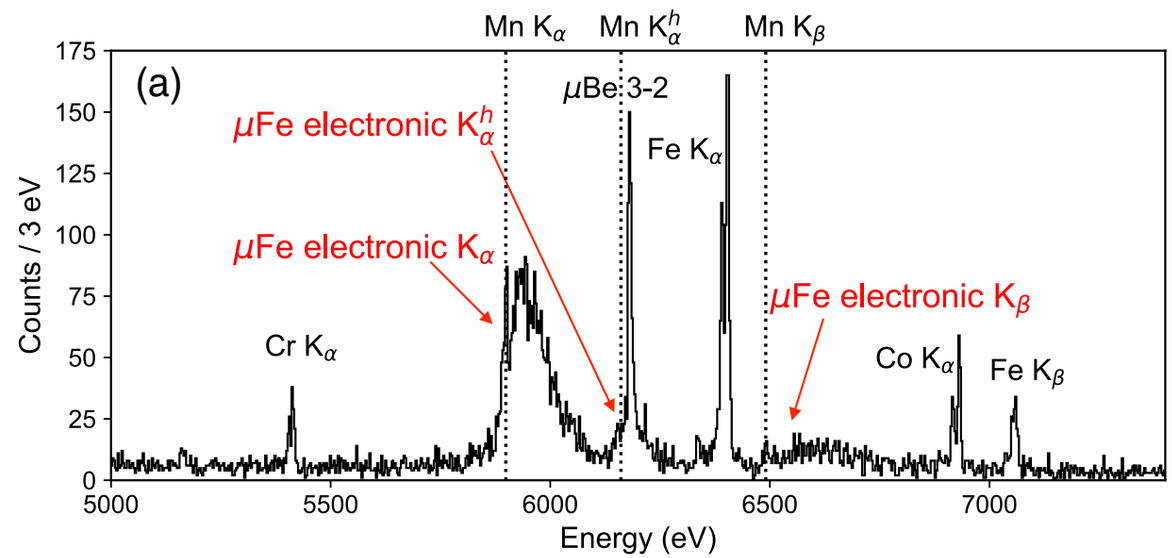

- Ideal to have good coverage with reasonable resolution and range up to 1000 keV on the opposite side of MMC
  - Identify higher lying 2p-1s background lines
  - Gamma-gamma coincidences to uniquely identify elements and all associated lines

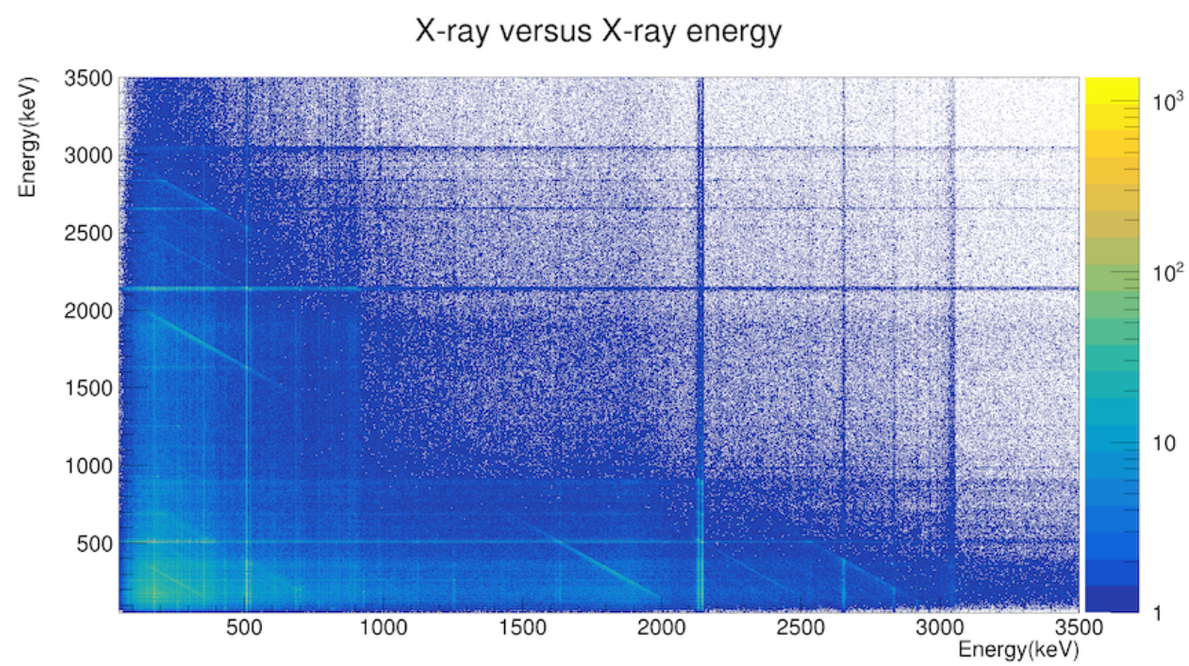

Test beam: open questions

- What is the aim of the test beam?
  - Real measurement?
  - Background and performance assessment?

- Which target(s)?

- Targets in air? Especially for second case? But: also relevant to see backgrounds at low energy…

- Auxiliary detectors? Whatever we have reasonably available: SDD, BeGe detectors, …

Additional interest in exotic atoms at PSI

- I was approached by the group performing kaonic atom spectroscopy at DAPHNE
- Developed technology that they would like to spread and use for other applications
- Bragg spectrometer: VOXES
- Up to 20 keV

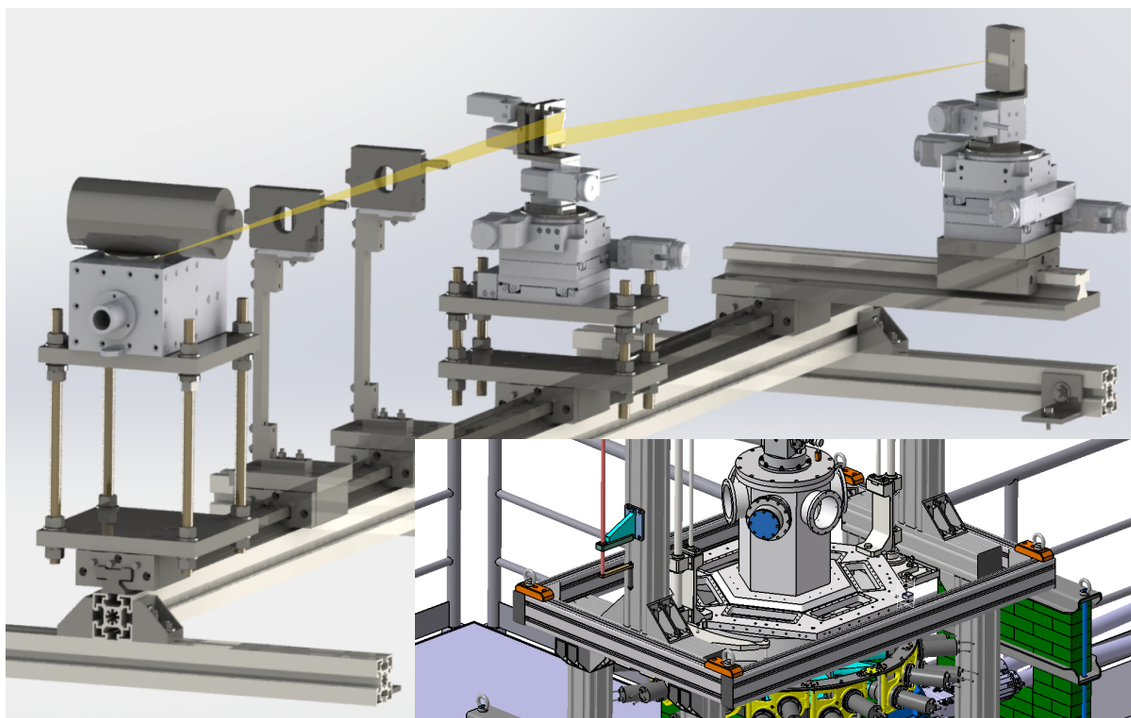

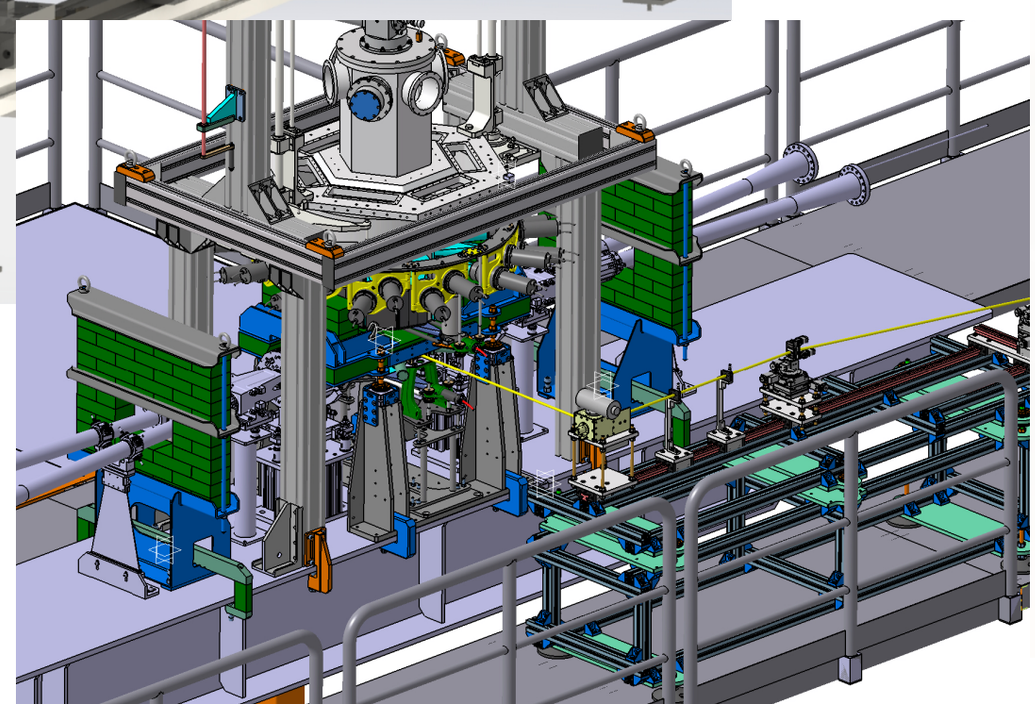

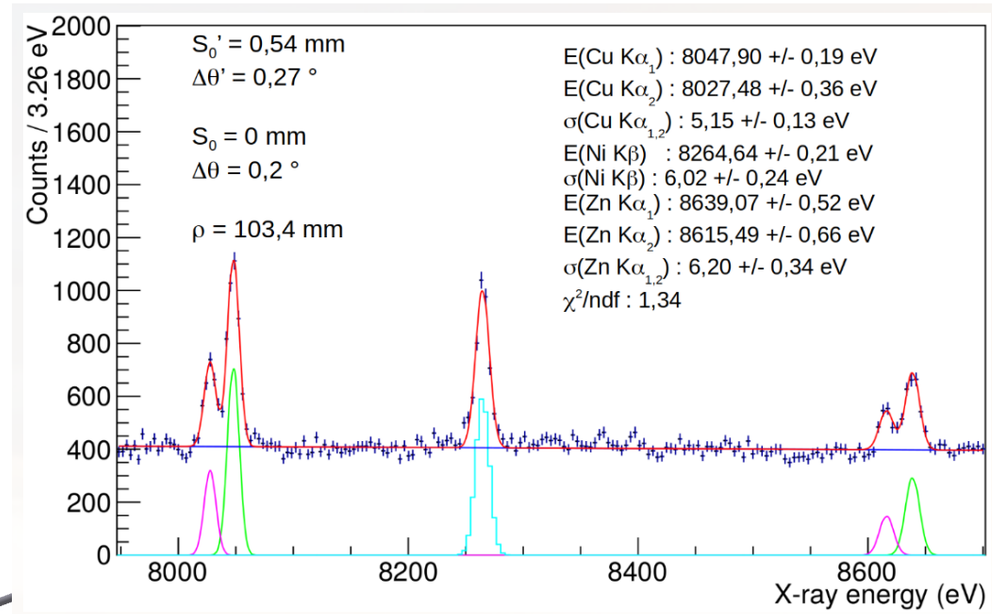

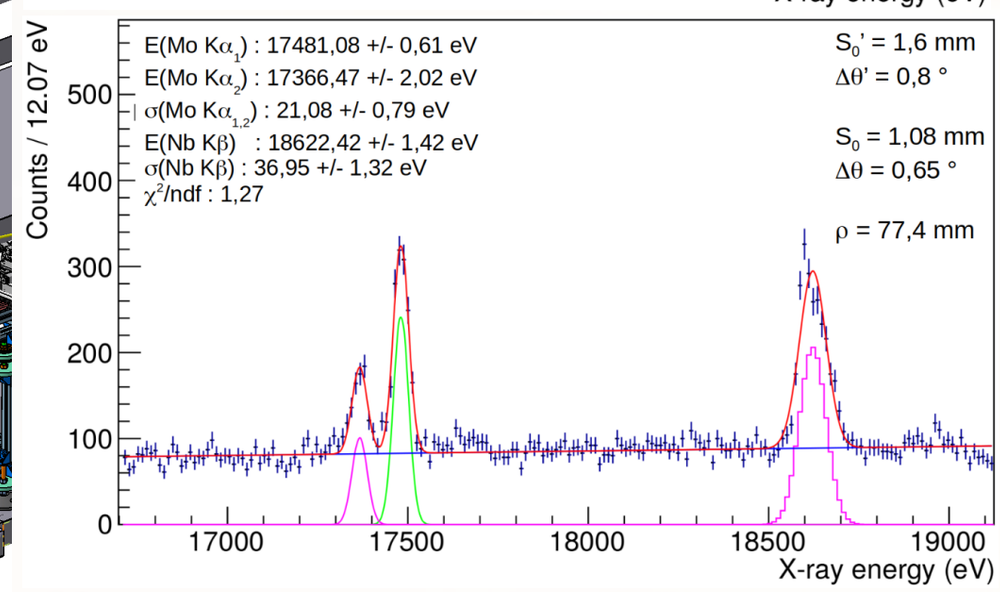

Additional interest in exotic atoms at PSI

- Additional detectors:
  - Thick SDD detectors (self-made I believe)
  - Novel CdTe and CdZnTe crystals:
    - keV resolutions up ~300 keV, compact, no cooling, fast