# High Electric Field Development for the SNS nEDM Experiment


**T. M. Ito[1], D. H. Beck[2], S. M. Clayton[1], C. Crawford[3], S. A. Currie[1], W. C. Griffith[1], J. C. Ramsey[1], A. L. Roberts[1], R. Schmid[4], G. M. Seidel[5], D. Wagner[3], S. E. Williamson[2], W. Yao[4]**

1. *Los Alamos National Laboratory, Los Alamos, NM 87545, USA,*
2. *Loomis Laboratory of Physics, University of Illinois, Urbana, IL 61801, USA*
3. *Department of Physics and Astronomy, University of Kentucky, Lexington, KY 40506, USA*
4. *Kellogg Radiation Laboratory, California Institute of Technology, Pasadena, CA 91125, USA*
5. *Department of Physics, Brown University, Providence, RI 02912, USA*
6. *Oak Ridge National Laboratory, Oak Ridge, TN 37881, USA*


## SNS nEDM Experiment

We are developing a new neutron electric dipole moment (nEDM) experiment, to be mounted at the Spallation Neutron Source (SNS) of Oak Ridge National Laboratory, with a goal sensitivity of $\delta d_n \sim 3\times10^{-28}$ e-cm . This experiment is based on the method proposed by Golub and Lamoreaux. In this experiment, ultracold neutrons (UCNs) will be produced in situ in the measurement cells filled with superfluid liquid helium from a 8.9 Å cold neutron beam. Polarized $^3$He atoms will be added to the liquid helium volume as comagnetometer. The UCNs spin will be analyzed using the spin dependent $^3$He(n,p)$^3$H reaction, the reaction product of which will produce scintillation in liquid helium. The signature of a nonzero EDM is a shift in the neutron precession frequency upon application of an electric field.

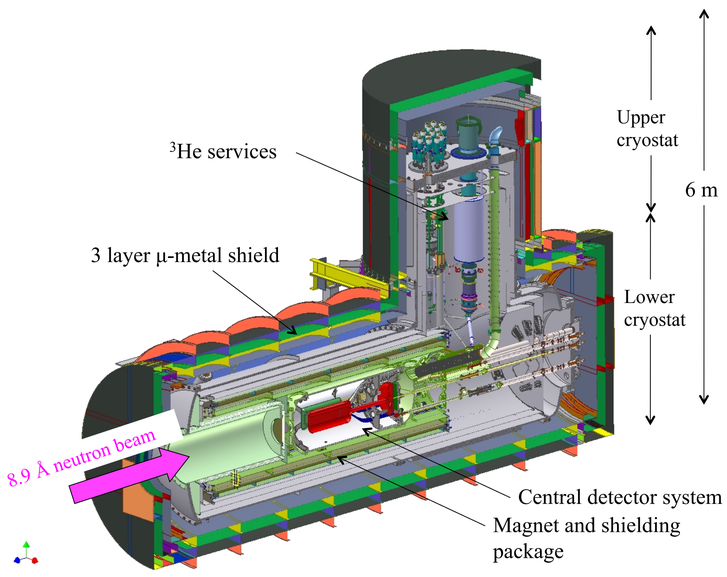


*Fig. 1. A schematic showing the design of the SNS nEDM experiment. The apparatus will consist of a large cryostat enclosed in 3 layers of μ metal shields. The cryostat houses the Magnet Package, the Central Detector System, and the $^3$He Services.*

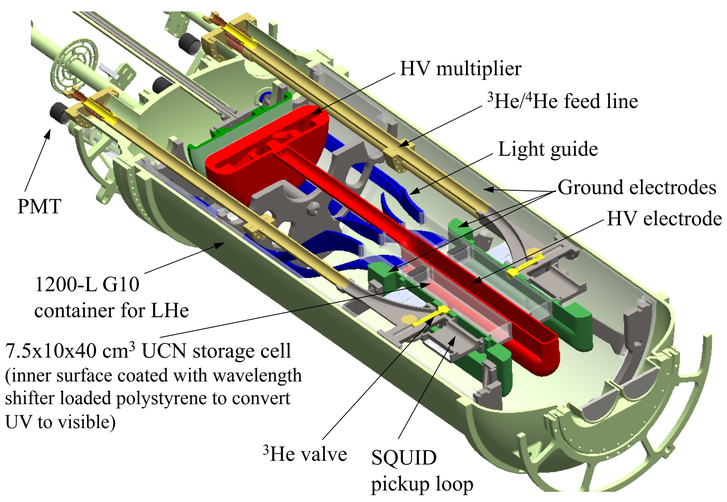


*Fig. 2. A schematic showing the design of the Central Detector System.*

## Electric breakdown in liquid helium

We expect to be able to achieve a higher electric field in LHe than in vacuum, although the understanding of the phenomena of electric breakdown in liquid helium is rather limited, in particular compared to that in gas. The intrinsic breakdown field in LHe is expected to be very high (> 10 MV/cm) based on the consideration of mean free path of ions in LHe.

A generally accepted picture of electric breakdown in LHe is as follows: (1) a vapor bubble is formed on the surface of the electrode e.g, by field emission from roughness on the cathode. (2) the vapor bubble grows by some mechanism and forms a column of gas reaching from one electrode to the other. (3) electrical breakdown occurs through the gas. Therefore electrical breakdown in LHe depends on the surface properties of the electrodes.

## Medium Scale High Voltage (MSHV) Test Apparatus

We have developed the Medium Scale High Voltage (MSHV) test apparatus in order to study electric breakdown in liquid helium under a condition approximating that for the SNS nEDM experiment. The MSHV system features a 6 liter volume filled with LHe filled volume that can be cooled to 0.4 K. The pressure of the LHe inside can be varied between the saturated vapor pressure and 1 atm. It can accommodate electrodes that are 12 cm in diameter separated by a few cm. The two high voltage feeds allow introducing high voltages up to +/- 50kV (the HV performance is being improved). The dependence of the breakdown field strength on various parameters will be studied. These parameters include: temperature, pressure, gap size, and electrode material. In addition the effect of inserting a dielectric insulator between the two electrodes will be studied.

## MSHV Design

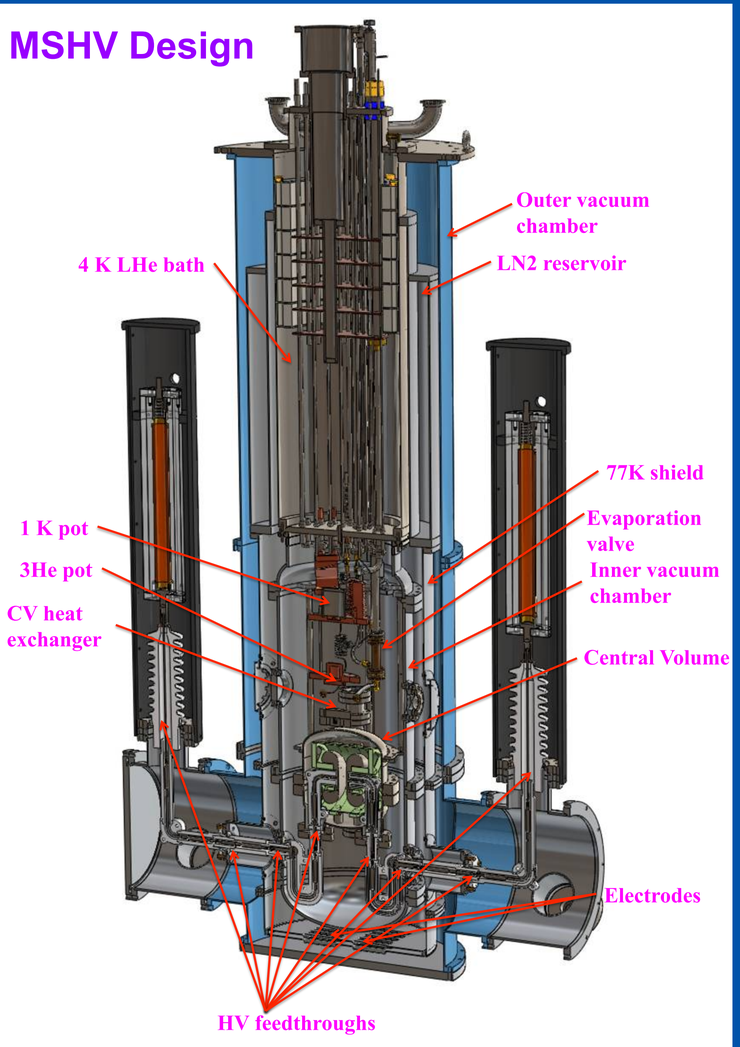


*Fig. 3. A schematic showing the design of the MSHV apparatus. The Central Volume (CV), a volume that houses the electrodes to be tested, holds 6 liters of LHe, which can be cooled down to 0.4 K using a 3He refrigerator. The pressure inside the CV can be varied between the saturated vapor pressure and 1 atm. A high voltage of up to ~ 50 kV can be brought into the system through each of the HV chains.*

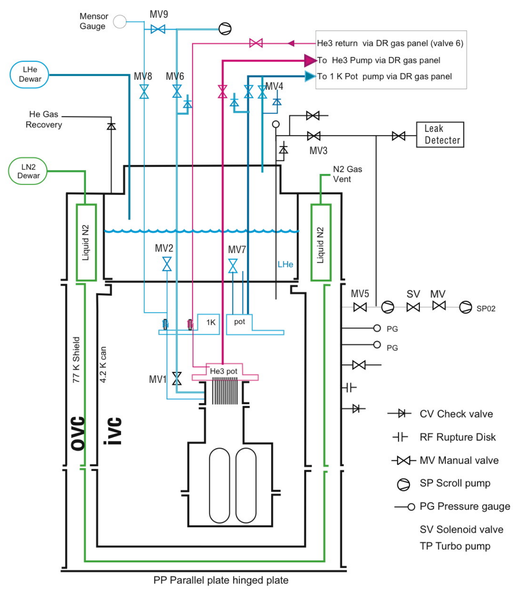


*Fig. 4. A schematic showing the flow of helium gas and liquid. The CV is filled by liquid helium from the LHe bath through MV2 fill valve. The initial pump out of the CV and the emptying of the CV after an experiment is done by opening the large aperture superfluid tight valve, MV1.*

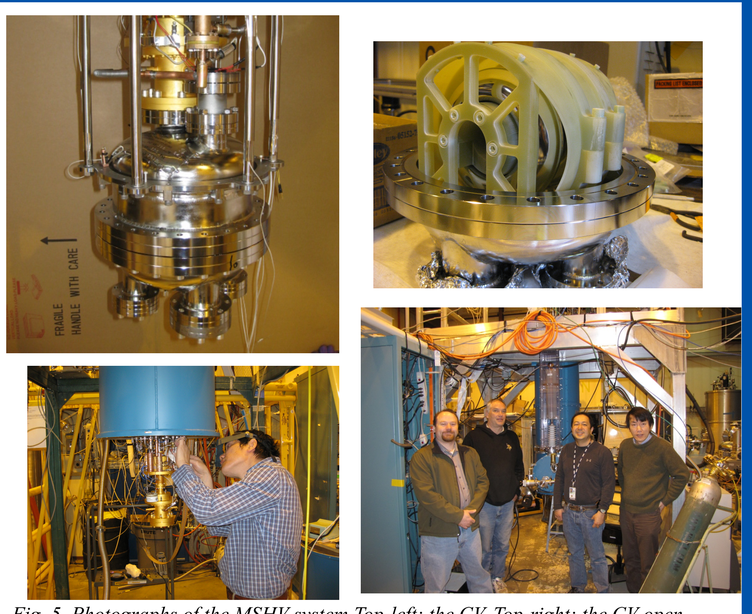

*Fig. 5. Photographs of the MSHV system Top-left: the CV. Top-right: the CV open showing the electrode assembly. Bottom-left: Weijun Yao working on sensor wiring. Bottom-right: MSHV system and some of the team members.*

## Initial electrodes – electropolished stainless steel Rogowski electrodes

The first tests using the MSHV system were performed using electropolished stainless steel electrodes. The electrodes had the so-called Rogowski profile and were designed so that the field between the two electrodes is uniform and is the highest field in the system. The shape of the electrode was optimized performing an FEM electrostatic calculation

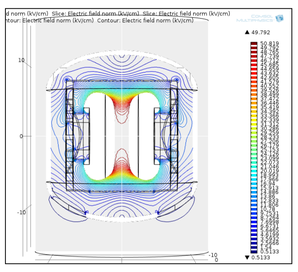

*Fig. 6. Results of an FEM electrostatic calculation. The electrode shape uses the so-called Rogowski profile. The field is uniform to 2% in the most of the area facing the gap.*

## Results SS Rogowski Electrodes with 1 cm gap

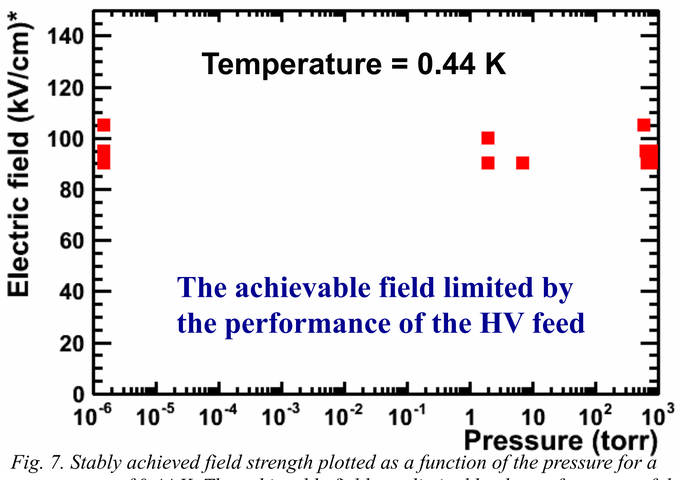


*Fig. 7. Stably achieved field strength plotted as a function of the pressure for a temperature of 0.44 K. The achievable field was limited by the performance of the HV feed. The achieved field strength exceeds the SNS nEDM goal.*

## Next step – test with a dielectric insulator between the electrodes

The next step is to study the electric breakdown with a dielectric insulator sandwiched between the electrodes. The electrode shape was optimized to minimize the field strength at "hot spots" at the electrode-insulator interface. PMMA will be used as the insulator.

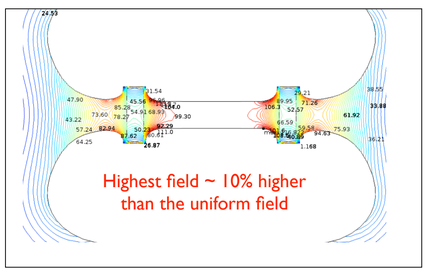


*Fig. 8. Results of an FEM electrostatic calculation optimising the shape of the electrodes with a dielectric insulator in between. The insulator is a PMMA cylinder. The highest field is about 10% higher than the uniform field in the middle.*