# R&D toward a new nEDM Experiment at LANL

Takeyasu Ito
*Los Alamos National Laboratory*

For the LANL nEDM Collaboration

nEDM Workshop
Ascona, Switzerland
November 3, 2014

# LANL nEDM Collaboration

S. Clayton, S. Currie, T. Ito, M. Makela, C. Morris, D. Olivas,
R. Pattie Jr., J. Ramsey, A. Saunders, Z.Tang, F. Trouw,
T. Womack
*Los Alamos National Laboratory*

C.-Y. Liu, J. Long, W. Snow
*Indiana University*

B. Plaster
*University of Kentucky*

S. K. Lamoreaux
*Yale University*

E. Sharapov
*Joint Institute of Nuclear Research*

# Outline

- Introduction/overview
- LANL UCN Source
- LANL UCN Source upgrade
- UCN transport system
- HV R&D
- 199Hg comagnetometer R&D
- Magnetics
- UCN detection/spin analysis
- Summary

# Concept for nEDM experiment at LANL

- A neutron EDM experiment with a sensitivity of $\delta d_n \sim O(10^{-27})$ e-cm based on already proven room temperature Ramsey's separated oscillatory field method could take advantage of the existing LANL $SD_2$ UCN source
  - nEDM measurement technology for $\delta d_n \sim O(10^{-27})$ e-cm exists. What is holding up the progress is the lack of UCN density.
  - The LANL UCN source currently provides a UCN density of ~ 60 UCN/cc at the exit of the biological shield
  - A 5-10 fold improvement in the delivered UCN density is required for an nEDM experiment with $\delta d_n \sim O(10^{-27})$ e-cm
- Such an experiment could provide a venue for the US nEDM community to obtain physics results, albeit less sensitive, in a shorter time scale with much less cost while development for the SNS nEDM experiment continues.

# Goals for the 3 year LDRD project (LDRD: LANL internal funding)

- Demonstrate that such an nEDM experiment is indeed possible (i.e. statistical sensitivity)
  - Upgrade the existing LANL $SD_2$ based UCN source
  - Demonstrate that a sufficient number of UCNs can be stored in a <u>realistic</u> nEDM cell prototype
    - Realistic: HV, UCN storage, 199Hg comagnetometer, UCN spin polarizer, UCN spin analyzer, etc

    Perform Ramsey's separated oscillatory field measurements to demonstrate the statistical sensitivity per measurement or per day
- Addressing systematic effects due to magnetic field non-uniformity is <u>beyond the scope of</u> this phase of the project

# Los Alamos Neutron Science Center (LANSCE)

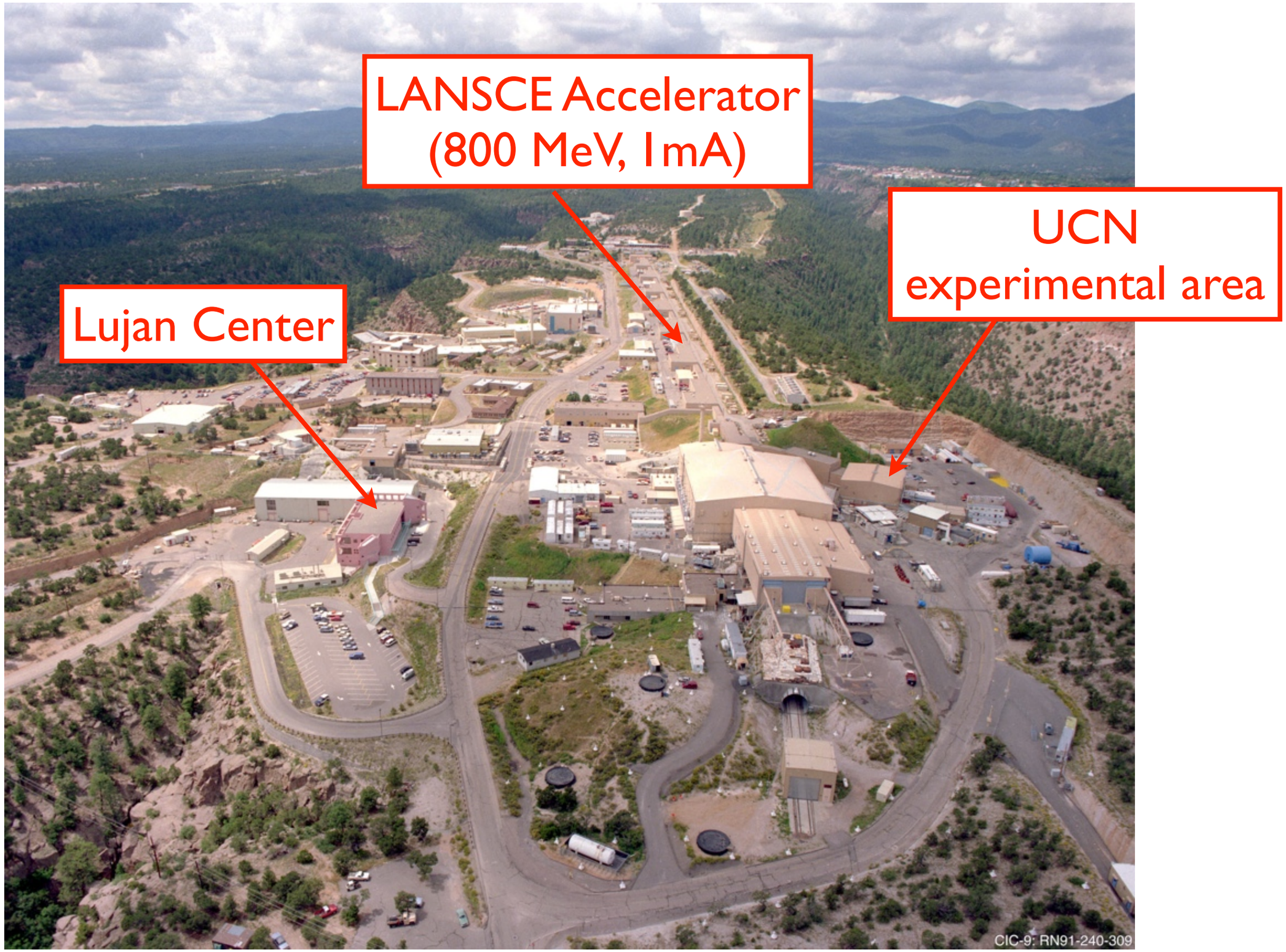

# LANL UCN Experimental Area

# LANL UCN Experimental Area

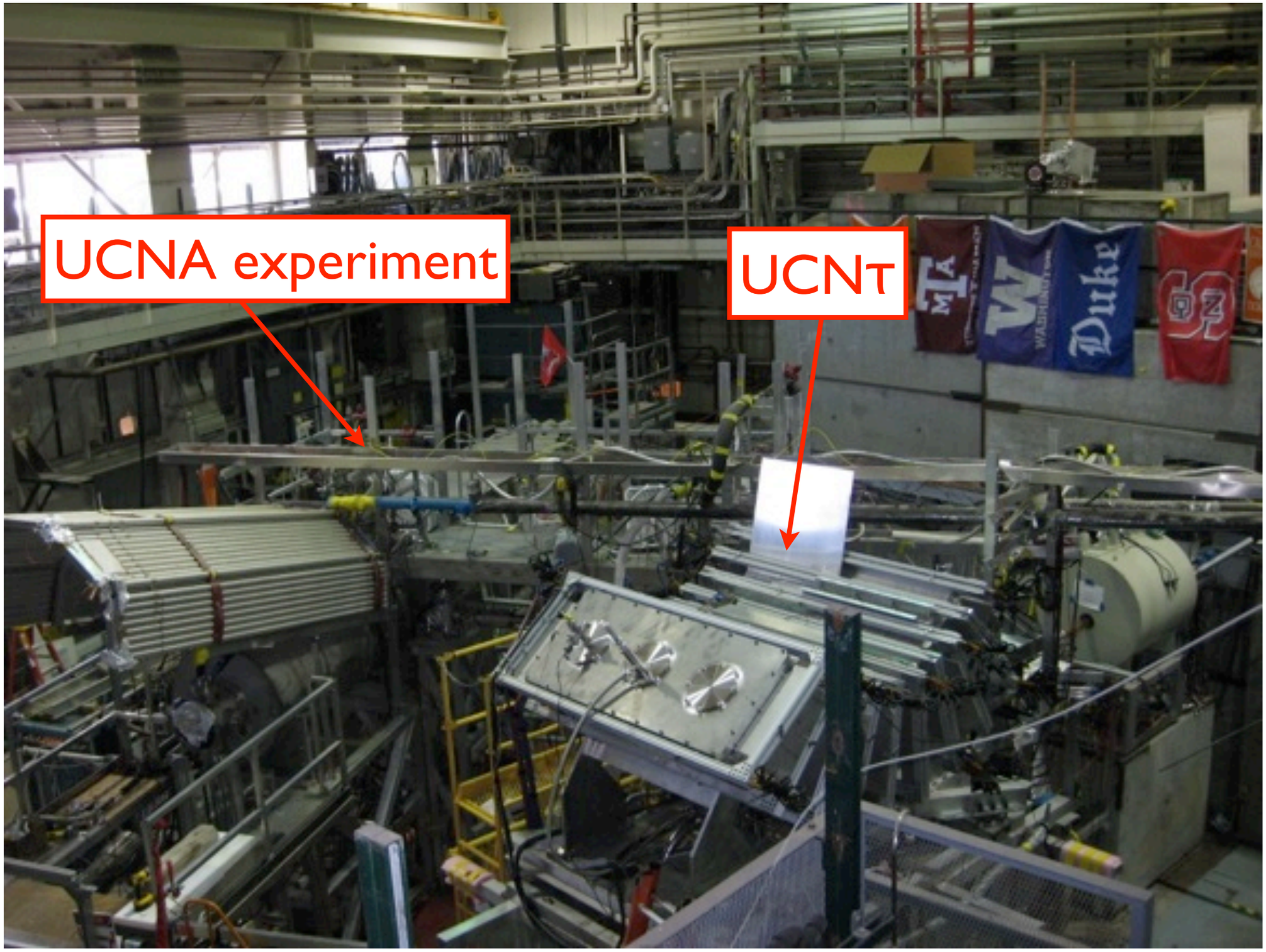

# LANL UCN Source

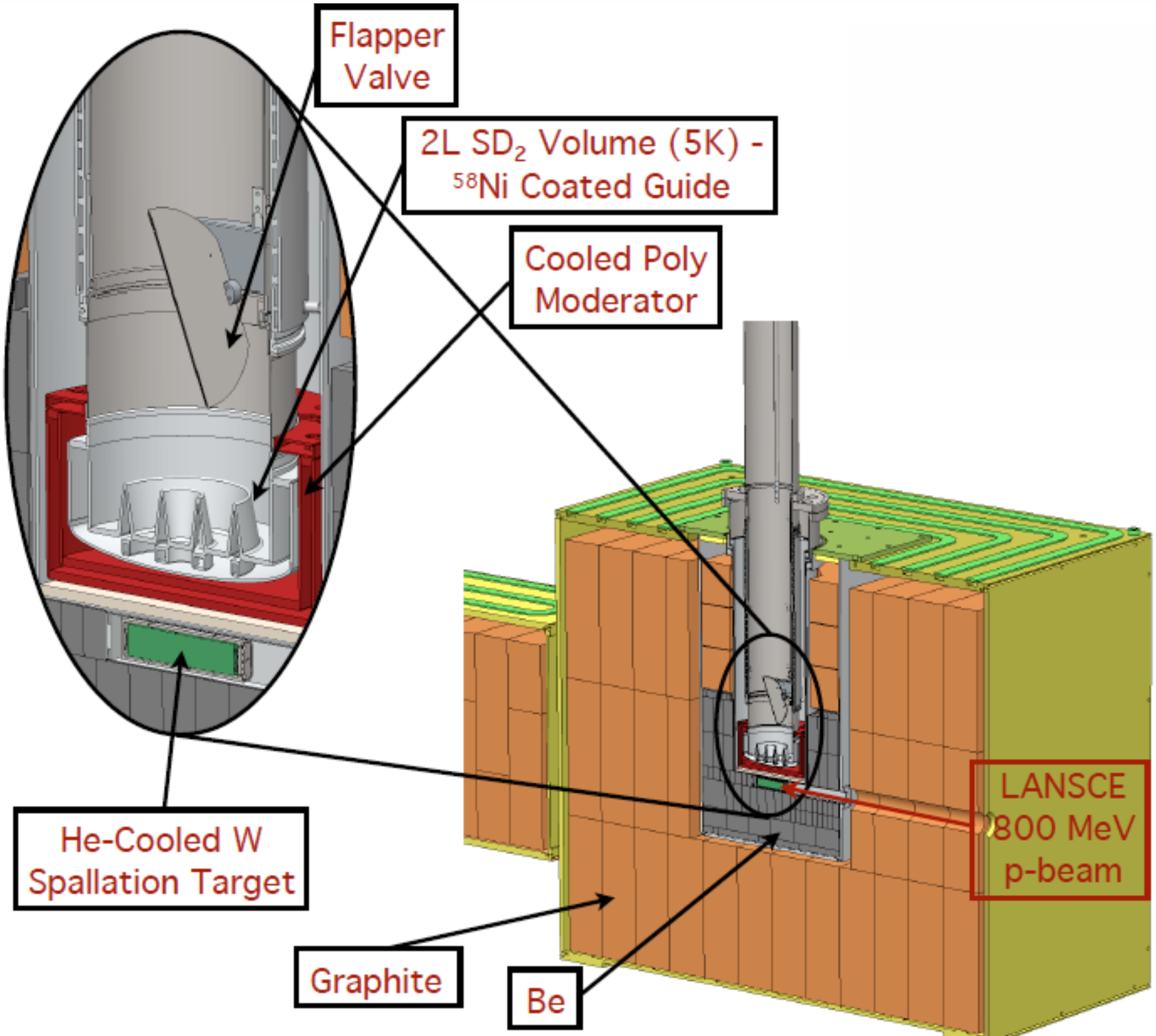


A. Saunders *et al.*, Rev. Sci. Instrum. **84**, 013304 (2013)

# Science program at LANL UCN Source

- UCNA experiment
- UCNB experiment
- UCNτ experiment
- Actinide science
- Detector R&D for the Nab experiment at SNS
- Neutron storage R&D for the SNS nEDM experiment

# LANL UCN Source performance

Unpolarized UCN density at the exit of biological shield

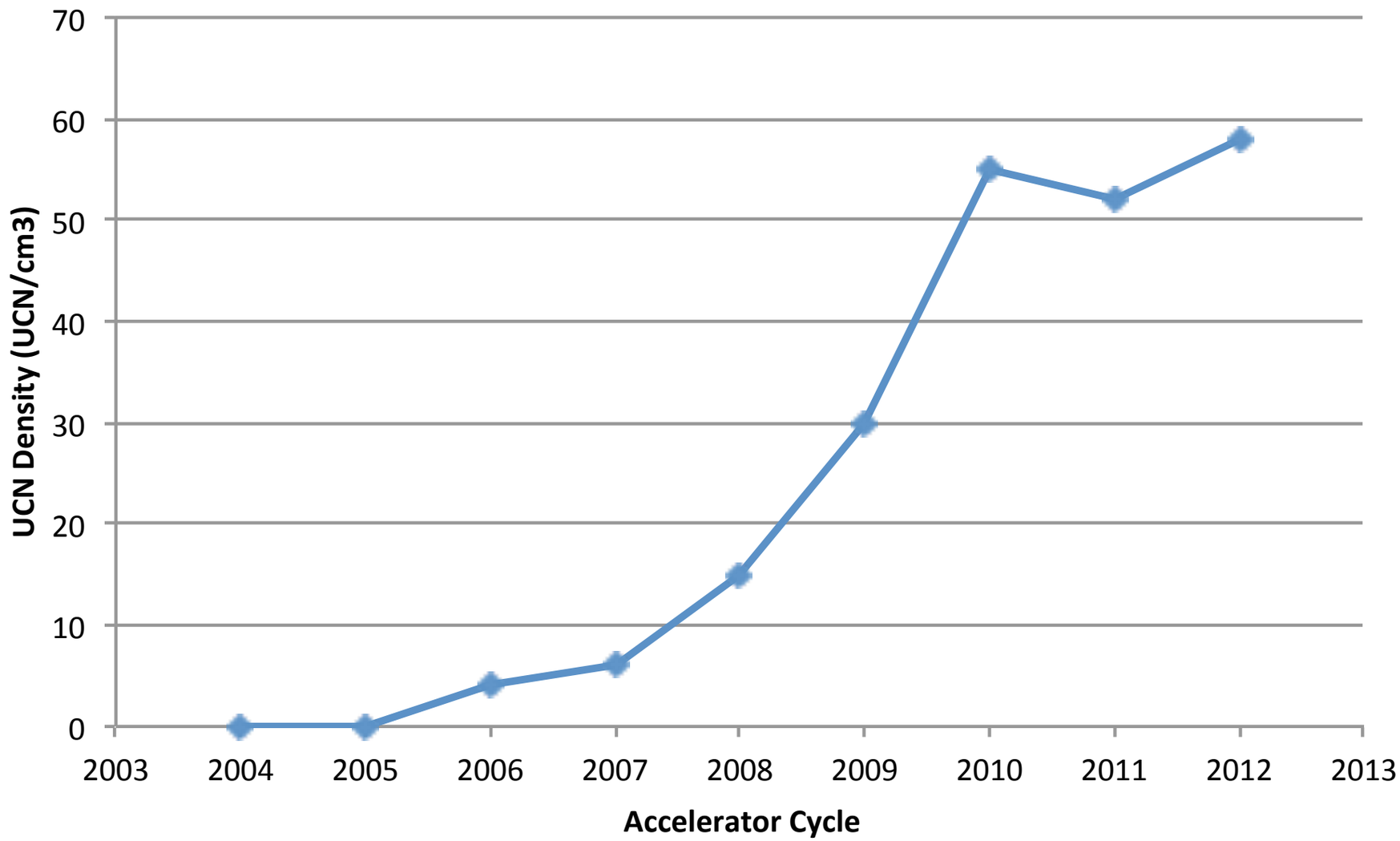

# Area B Layout

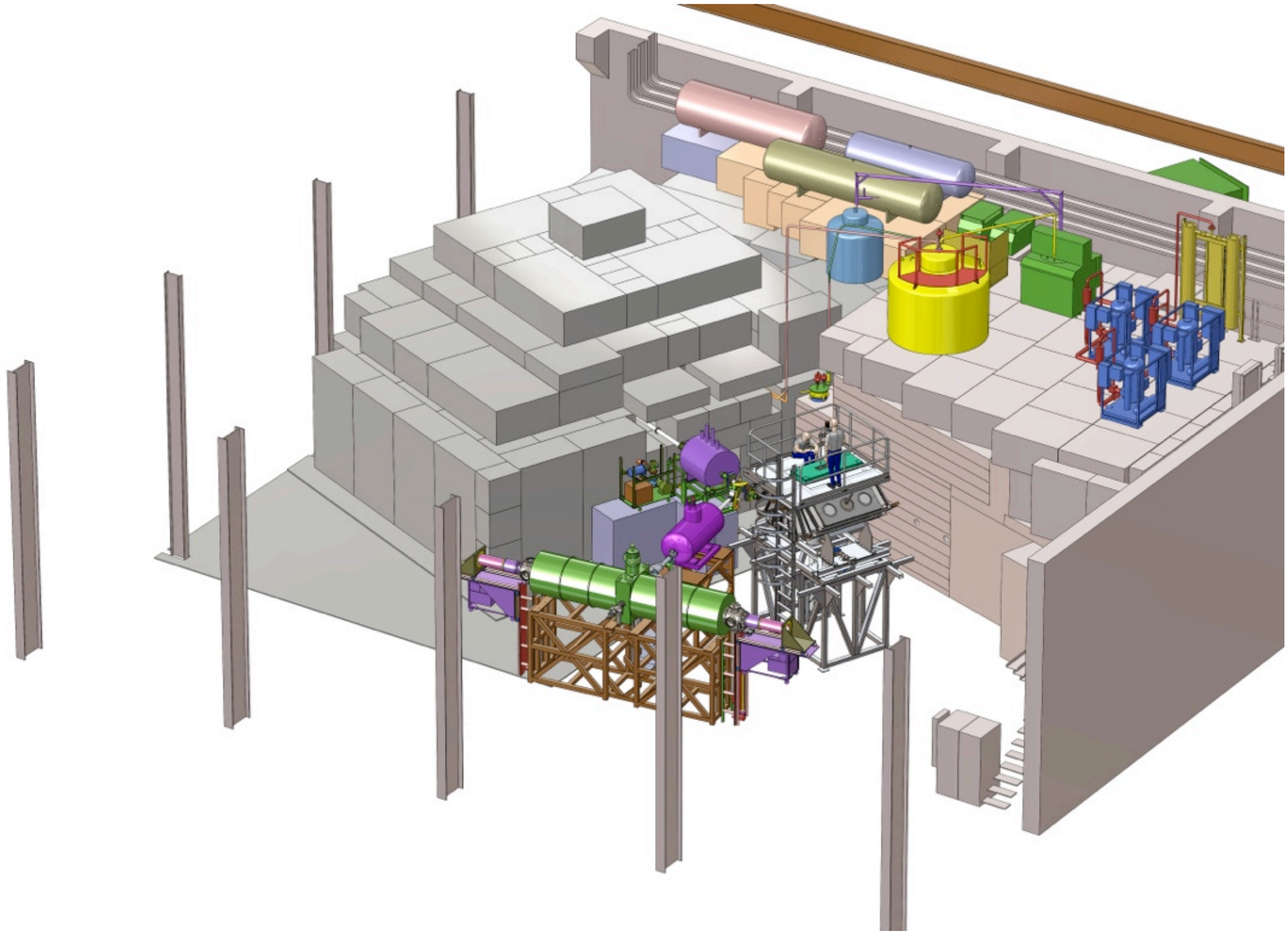

# Area B Layout

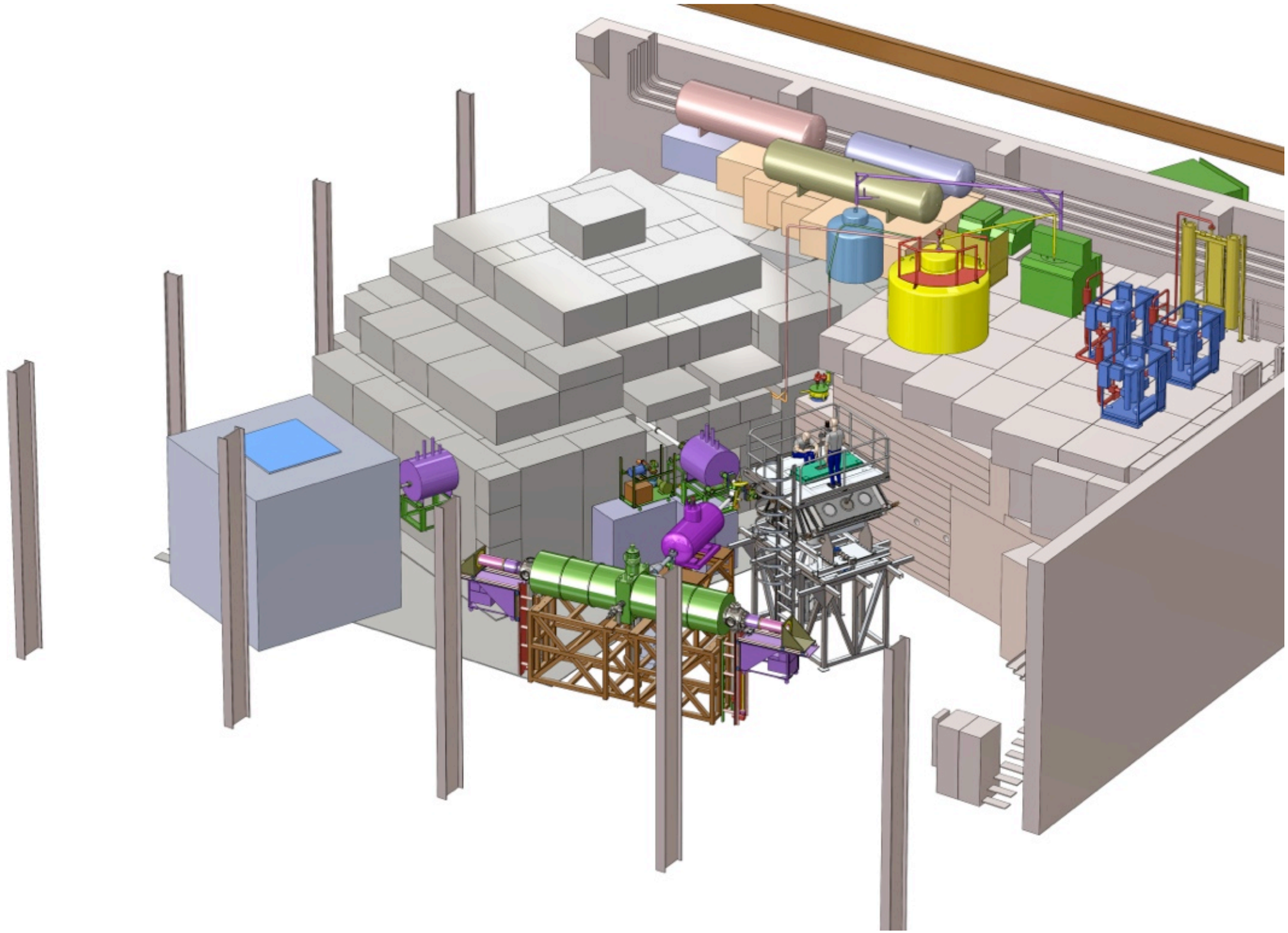

# Area B Layout

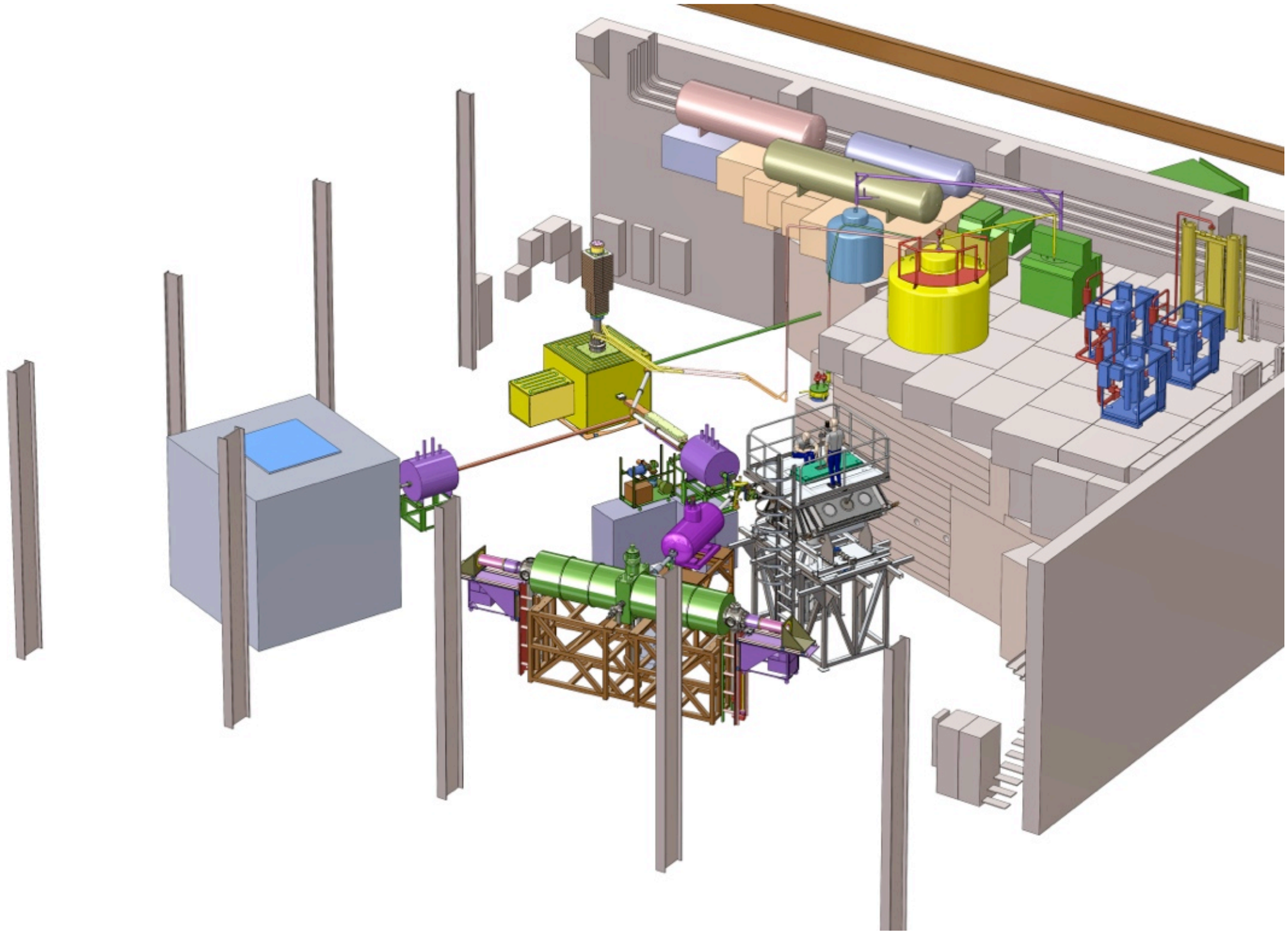

# nEDM area preparation

# Current LANL UCN Source

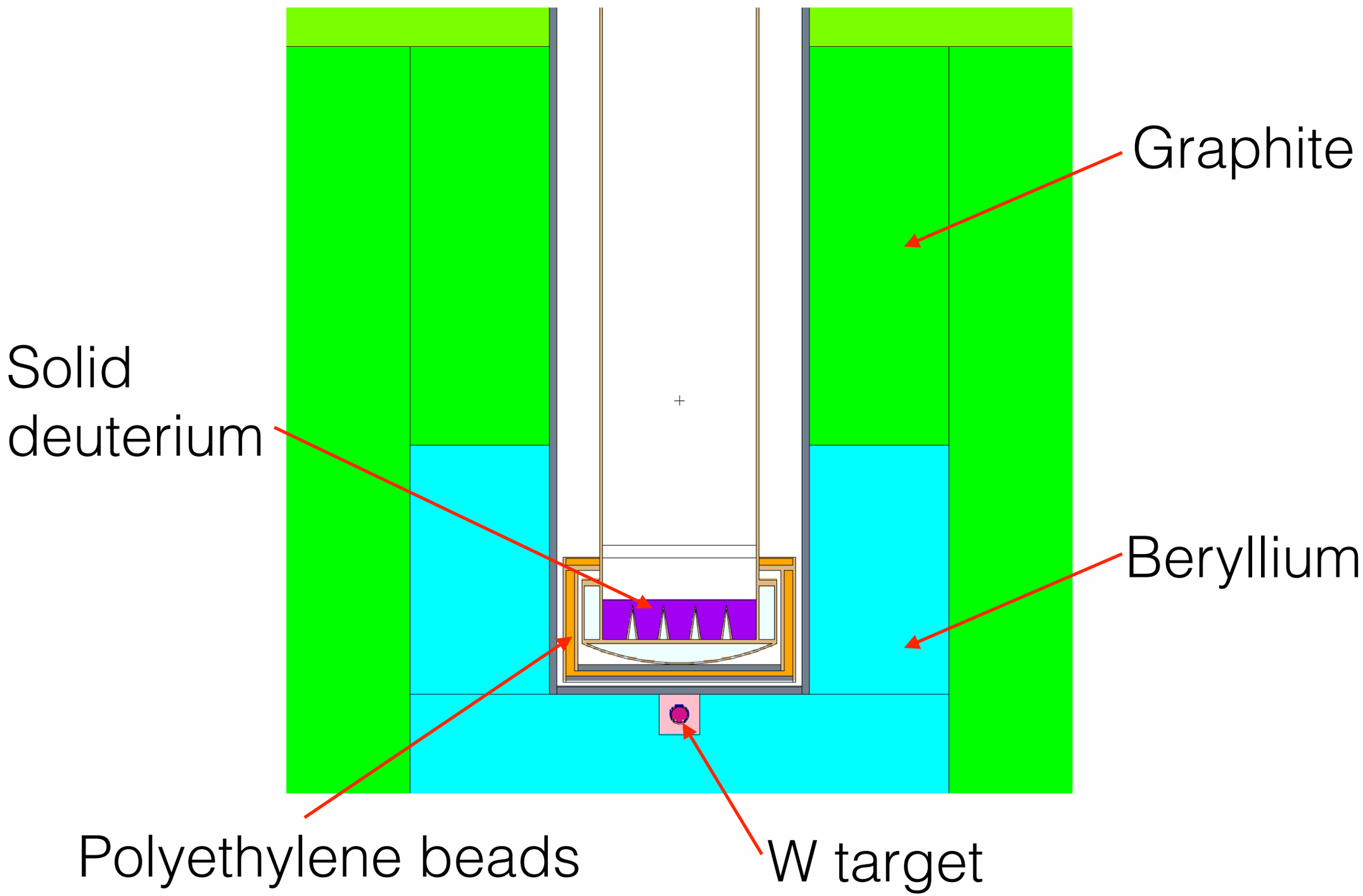

# Source optimization

$$\rho = \frac{p\ I\ V_{SD2}\tau}{V_{tot}}$$

$\rho$ : UCN density in the experiment (UCN/cc)

$p$ : UCN production density (UCN/cc/$\mu$C)

$I$ : proton beam current ($\mu$A)

$V_{SD2}$ : SD2 volume (cc)

$V_{tot}$ : total volume (cc)

$\tau$ : UCN lifetime (effective lifetime because of the shutter operation) (s)

# The goals of the UCN source optimization and boundary conditions

This source upgrade is based on the experience gained by working on the previous prototype and the current source.

- Goals: maximize the UCN production
  - More optimized geometry (e.g. diameter and connection to the horizontal guide)
  - More optimized cold moderator
  - Ease of engineering
- Boundary conditions
  - The “source insert” can be replaced
  - The Be box and graphite moderators cannot be modified

# Current and new sources (MCNP model)

Current

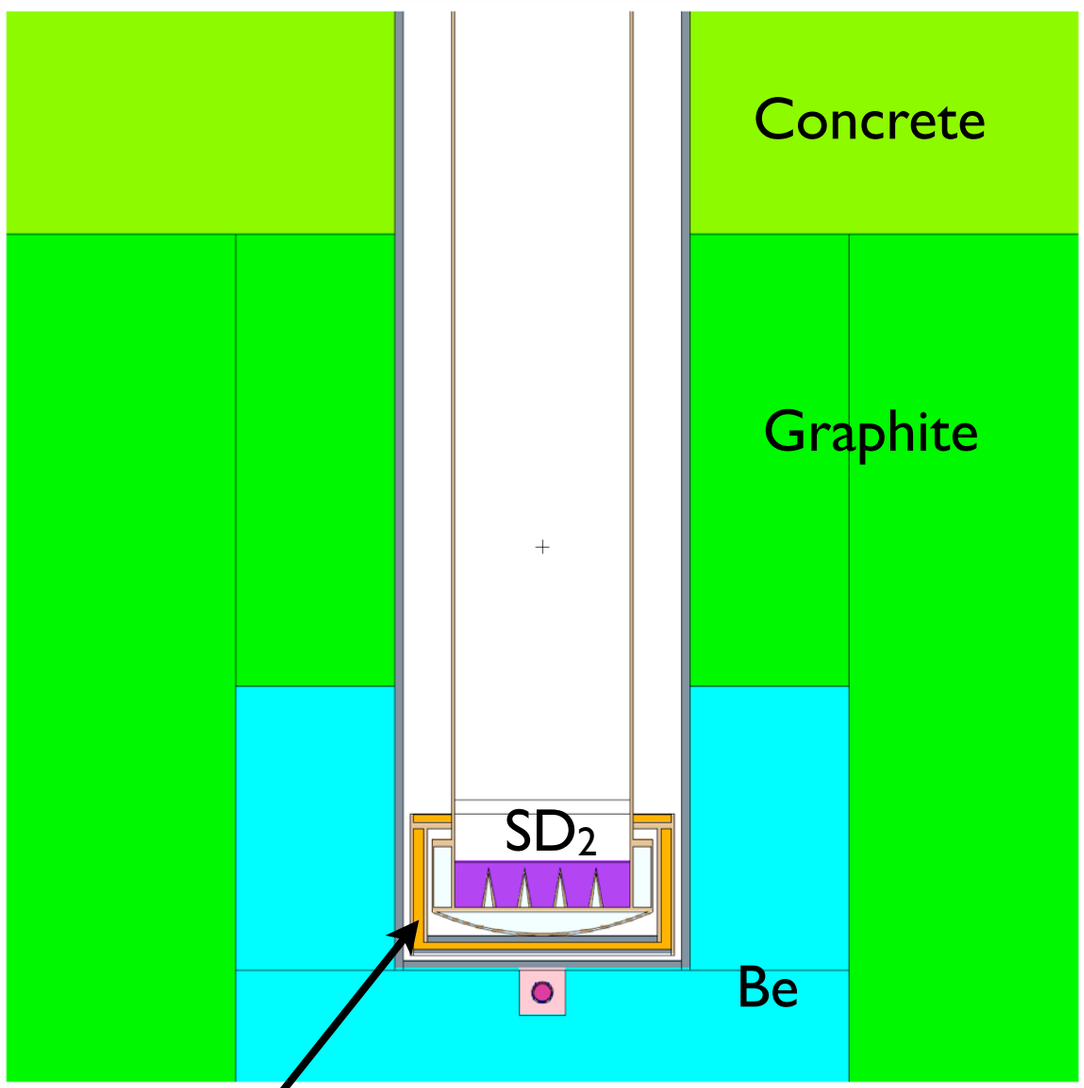


Cold moderator (polyethylene)

New

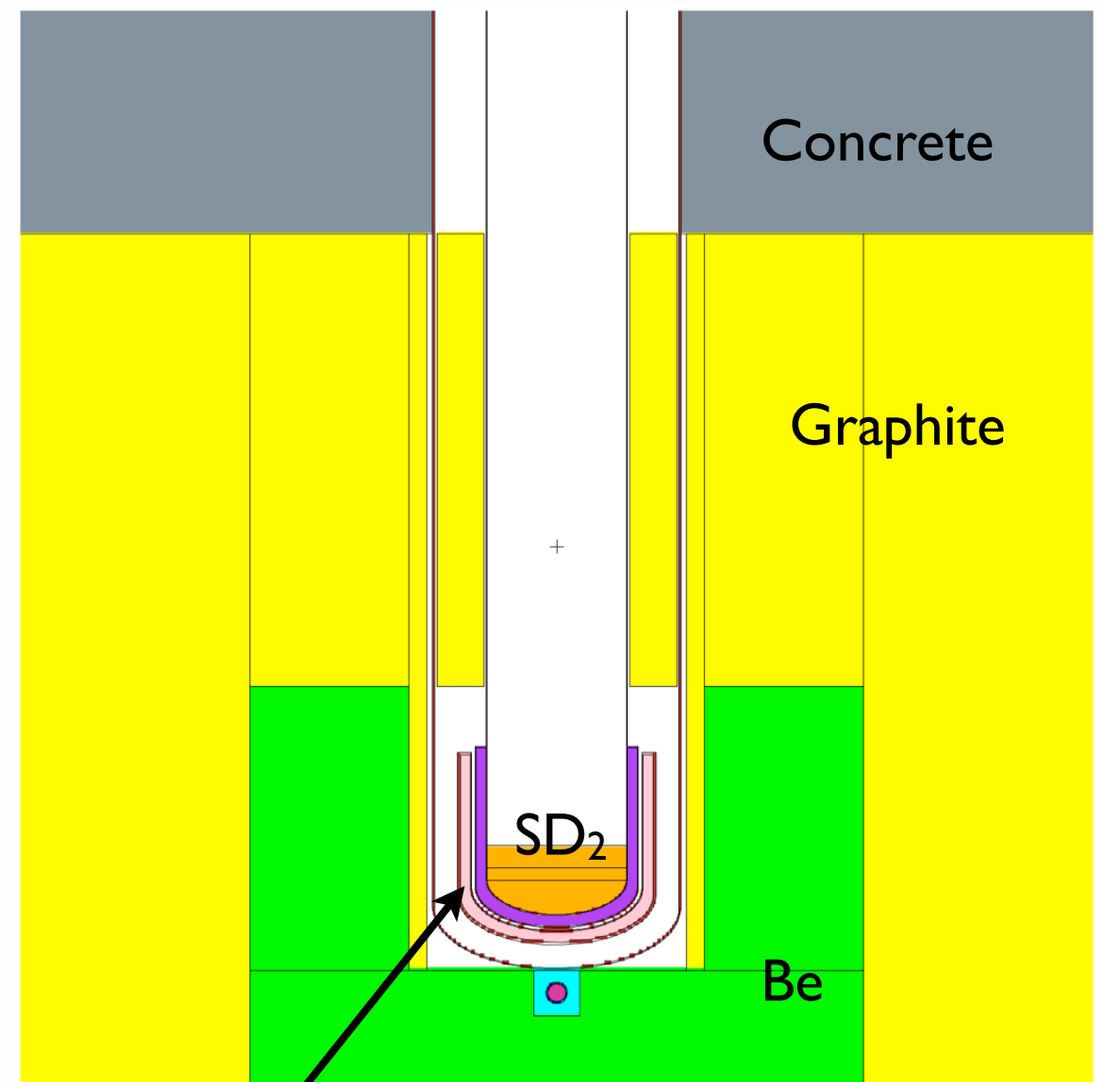


Cold moderator

# Current and new sources (bottom part)

Current

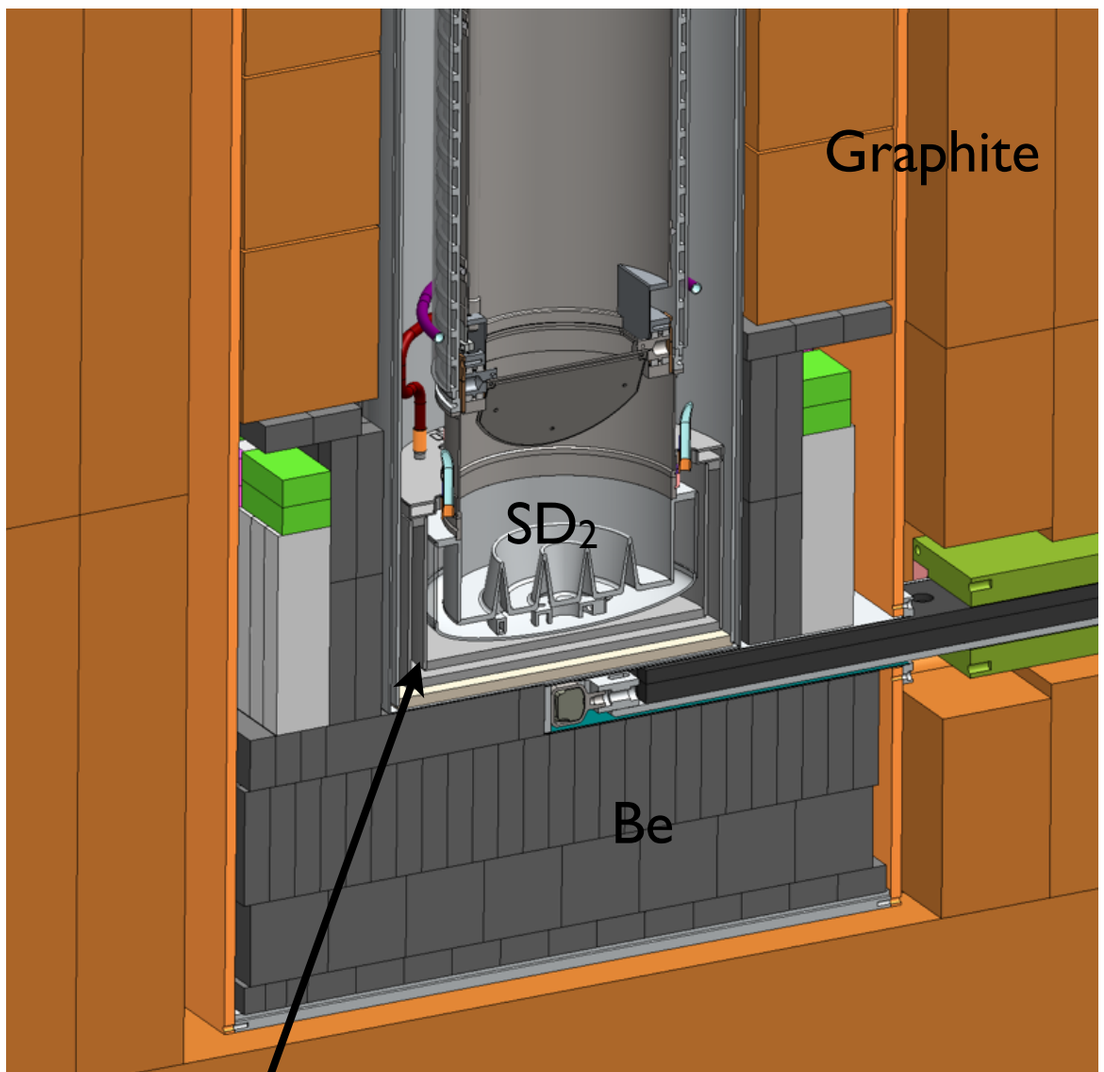


Cold moderator (polyethylene)

New

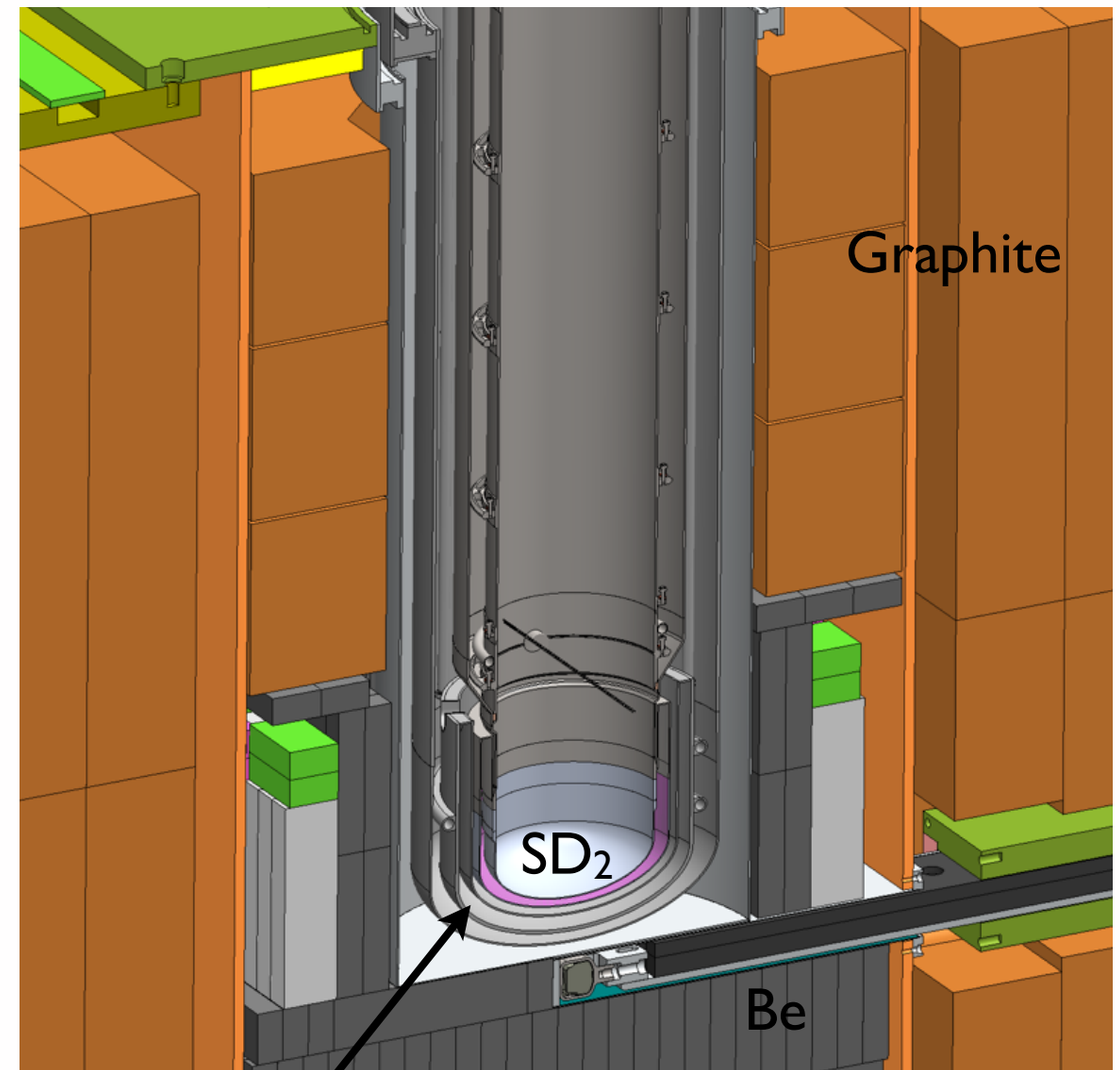


Cold moderator

# Current and new sources (top part)

Current

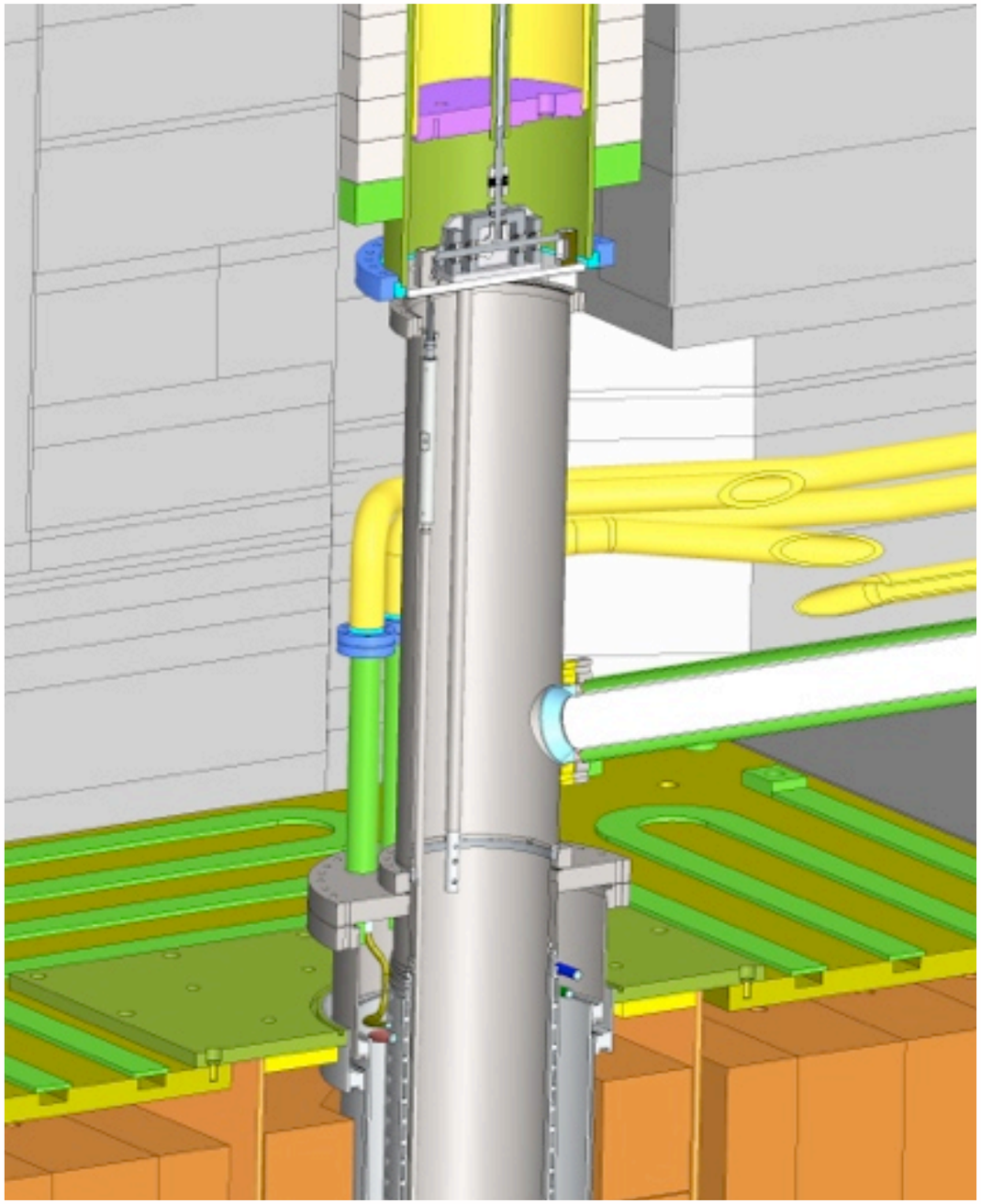

New

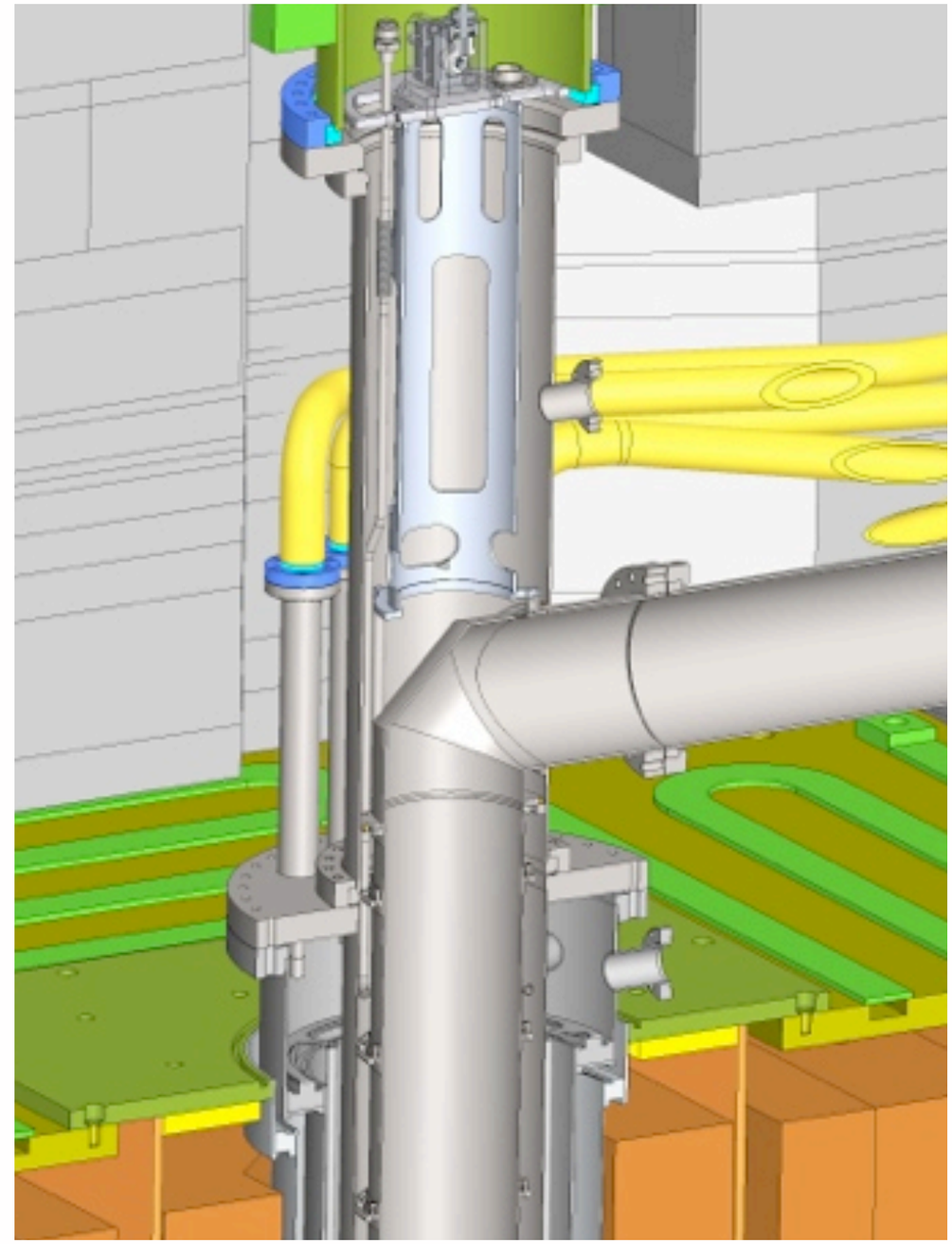

# Tools used

- MCNP6:
  - To calculate the cold neutron flux in the SD2 volume
    - Started from 800 MeV proton producing spallation neutrons
- Additional S(α,β) files

| Material | Temperatures | Source |
|---|---|---|
| **Ortho SD2** | 5K | R. Granada |
| **Polyethyelene** | 5K, 77K, 293K | C. Lavelle |
| **Solid methane** | 20K | D. Baxter |

# UCN production cross section

- UCN production cross section taken from Atchison et al. (2007) and Frei et al. (2010).

**Atchison et al (2007)**

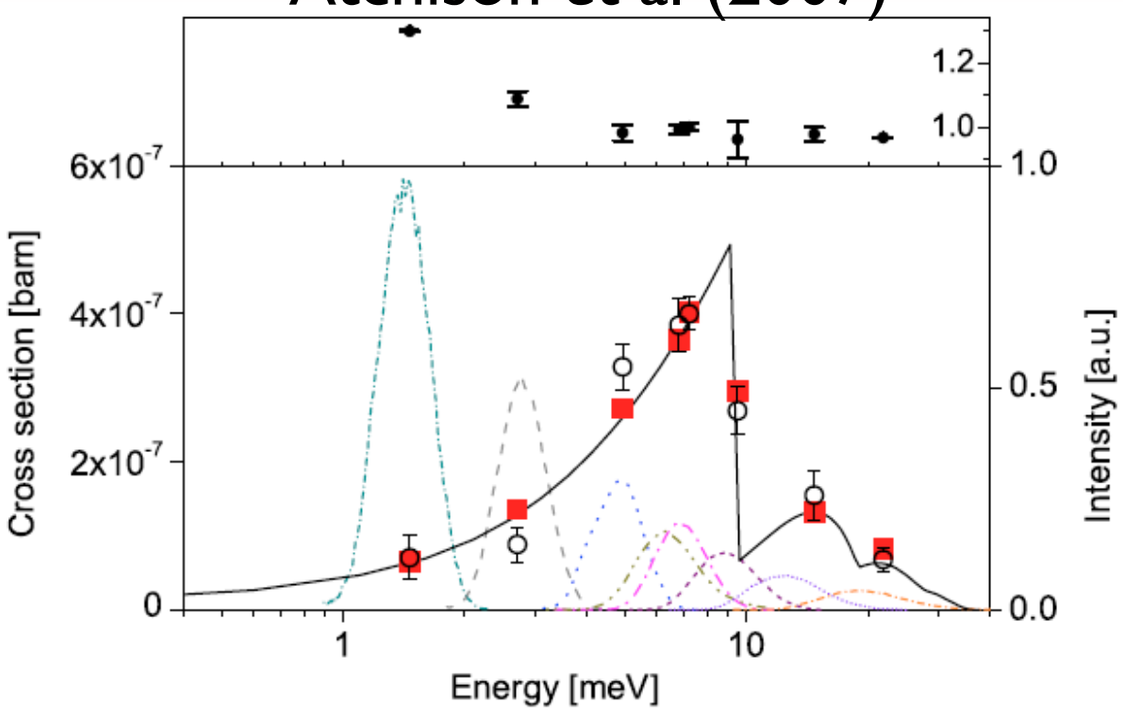


**Frei et al (2010)**

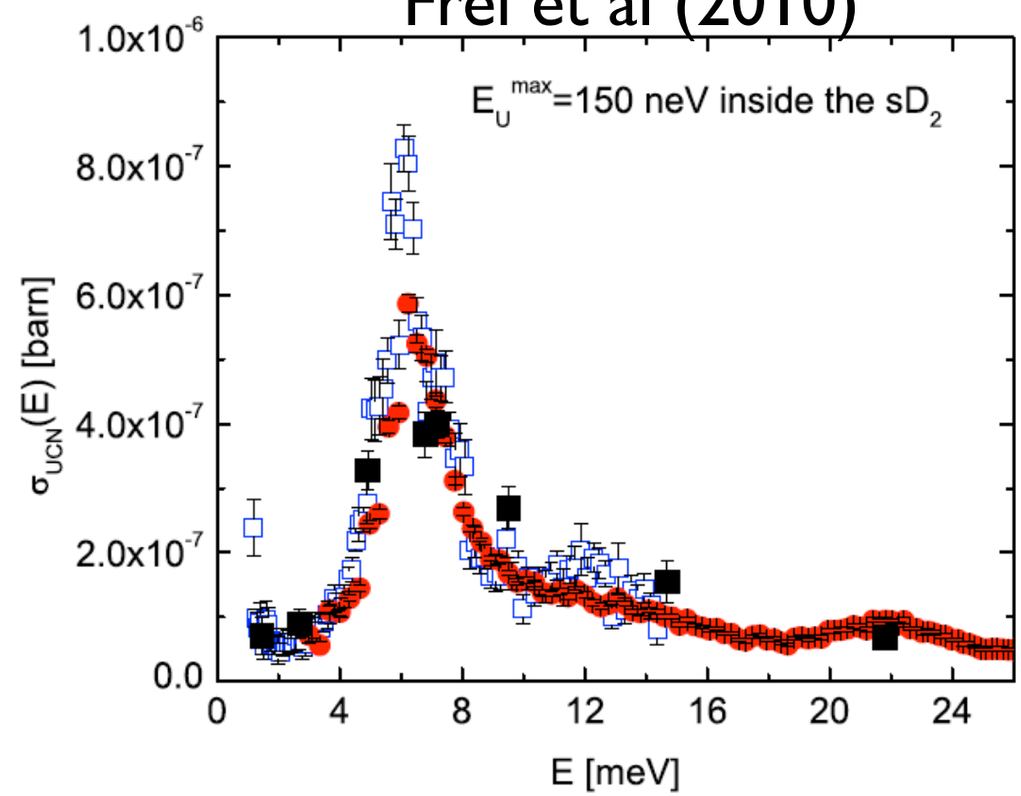


**7 meV ~ 80 K**

- UCN production rate is given by

$$P_{UCN} = \int \Phi_{CN} \sigma_{UCN} dE$$

CN flux

UCN production cross section

# Simulation of the current UCN source

**Cold neutron flux in the $SD_2$ volume (in the top 2.5 cm)**

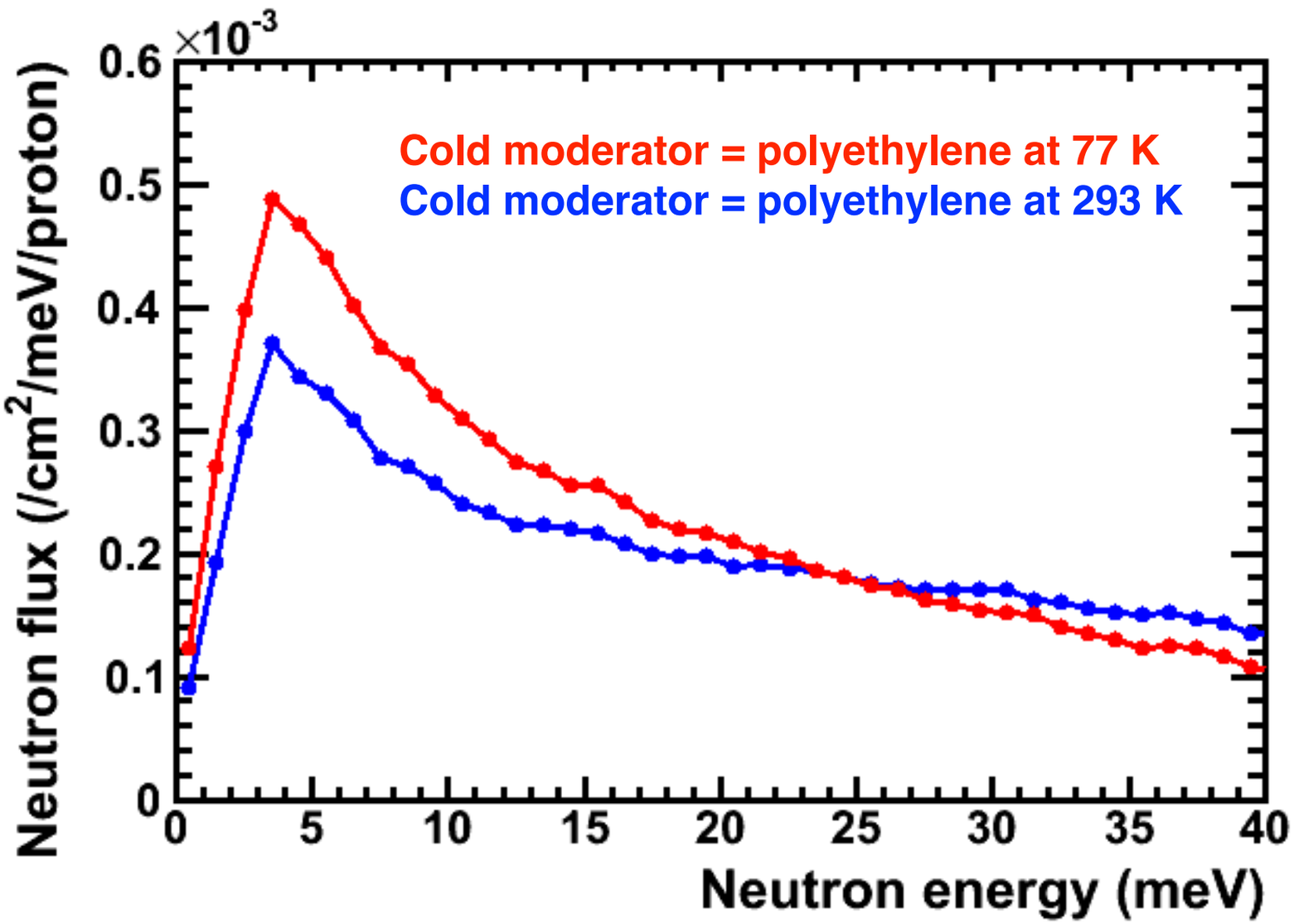


| Moderator | UCN production (UCN/cc/μC) |
|---|---|
| Poly 77K | 232 |
| Poly 293 K | 183 |

The source performance data indicate UCN production rate of ~100 UCN/cc/μC

# Source radius vs UCN production

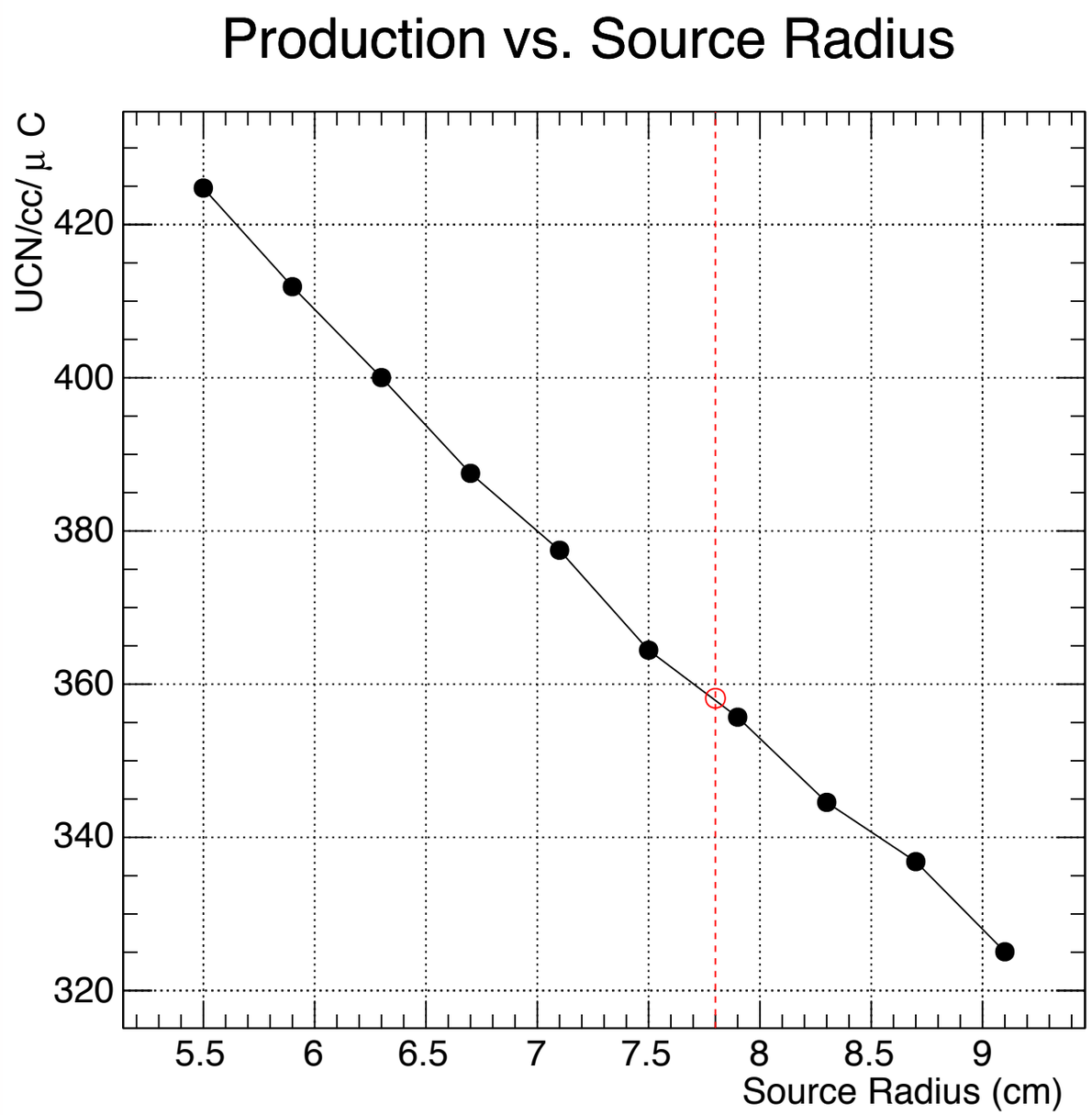

# Comparison of cold moderators

**Cold neutron flux in the $SD_2$ volume (in the top 2.5 cm)**

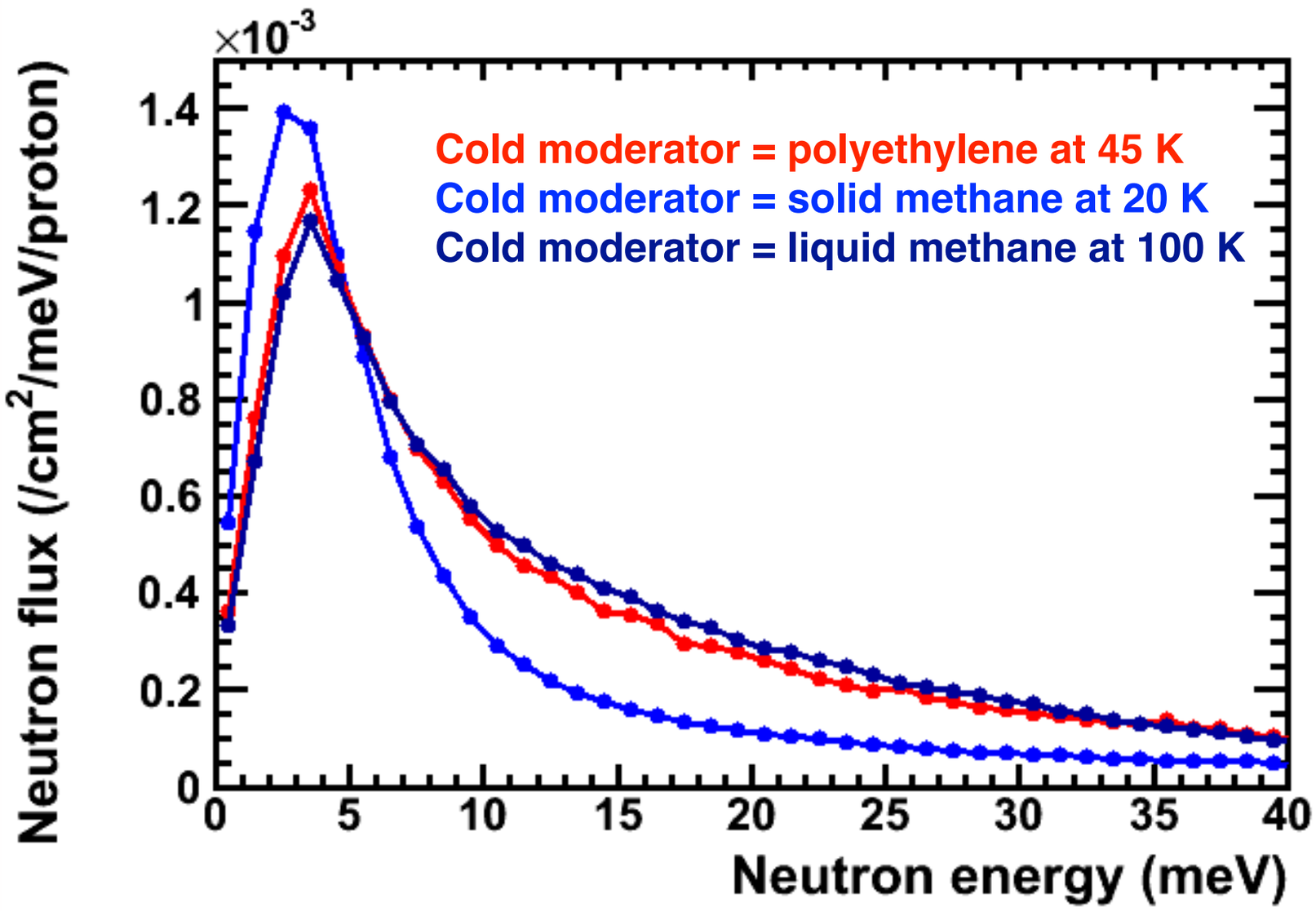


| Moderator | UCN production (UCN/cc/μC) |
|---|---|
| Poly 45 K | 436 |
| Solid methane 20 K | 357 |
| Liquid methane 100 K | 447 |

Other cold moderator materials considered include: $LH_2$ and mesityline

# Engineering considerations

- Heat to the cold moderator ~ 50 W

| Source | | Heating (W) |
|---|---|---|
| **Beam** | **Moderator** | 25 |
| | **Container wall** | 10 |
| **IR** | | 15 |
| **Total** | | **50** |

- Radiation damage:
  - Methane produces hydrogen gas as well as tar like substances
- Heating and other engineering consideration lead to use of polyethylene beads
- Need improved cooling method

# UCN production as a function of the distance from the bottom of the SD2 volume

Cold moderator = polyethylene 77K

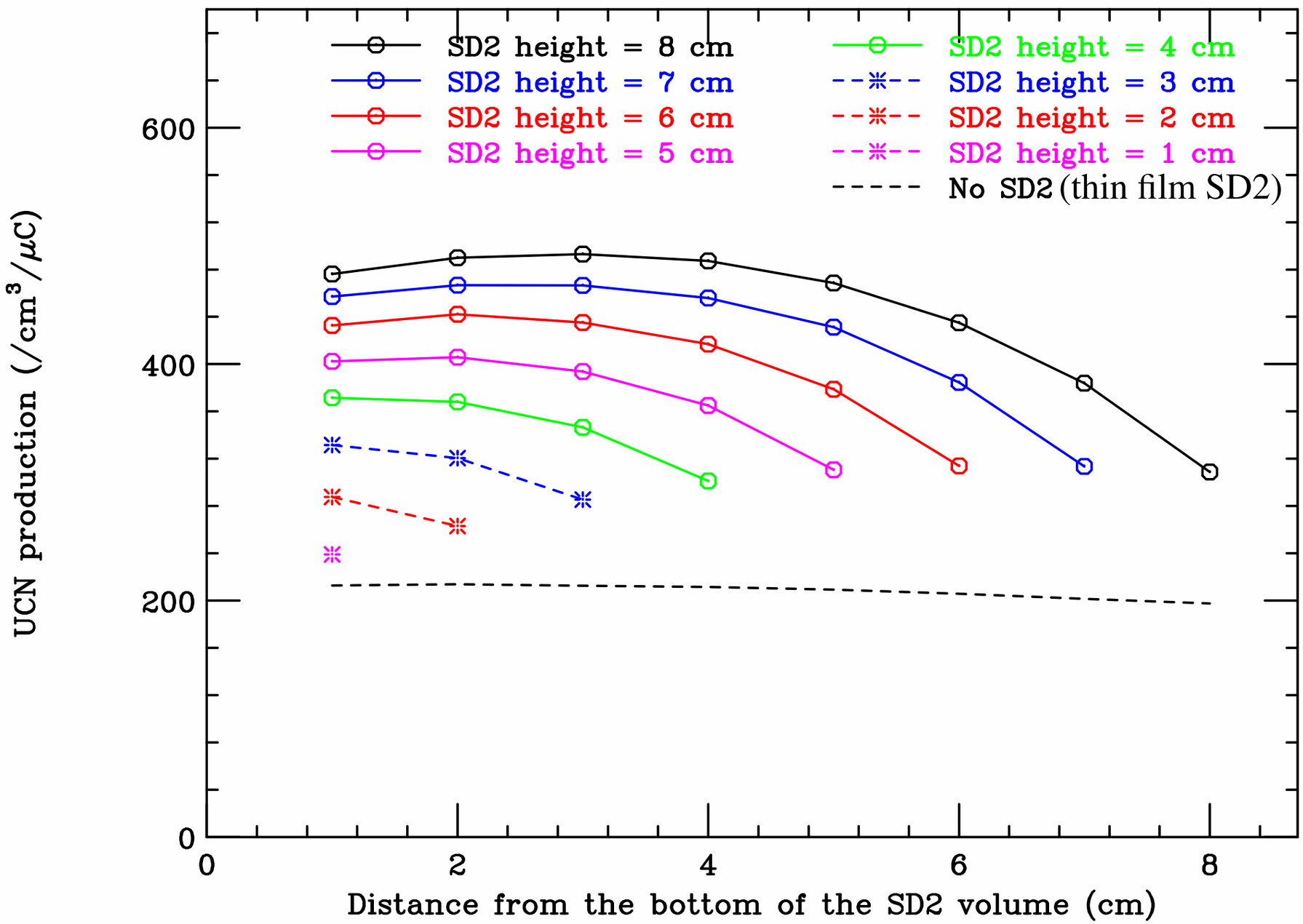

# Additional thermal moderator and UCN production

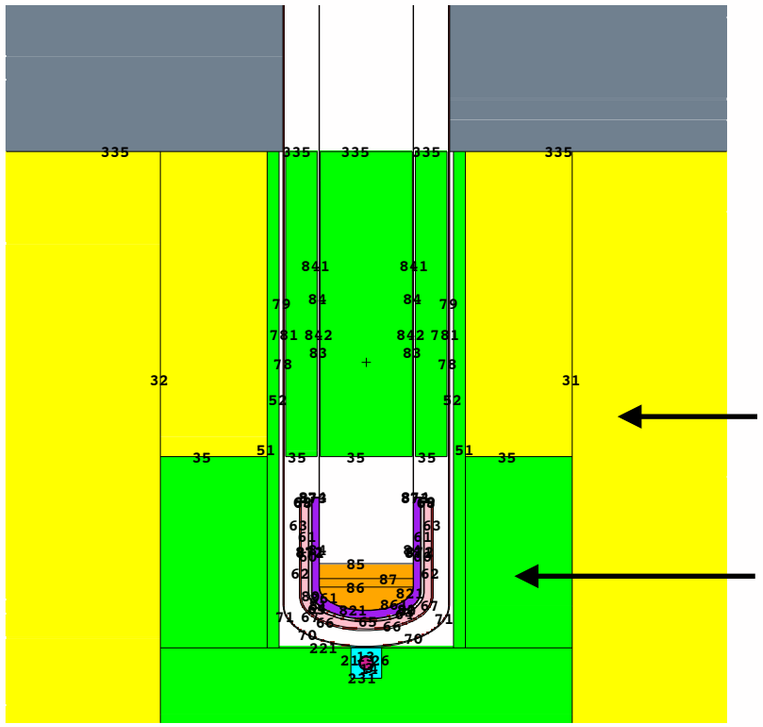

UCN prod

1.00

Graphite

Beryllium

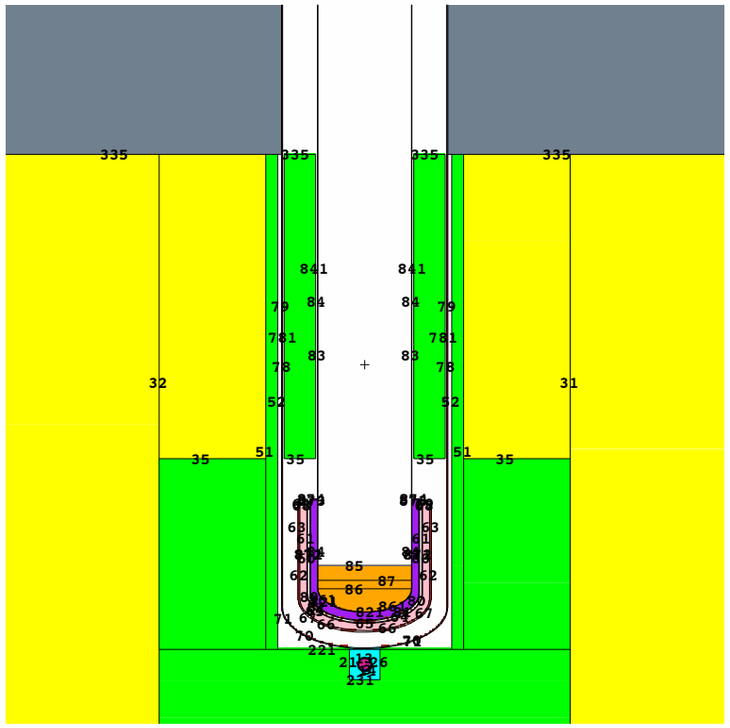

0.91

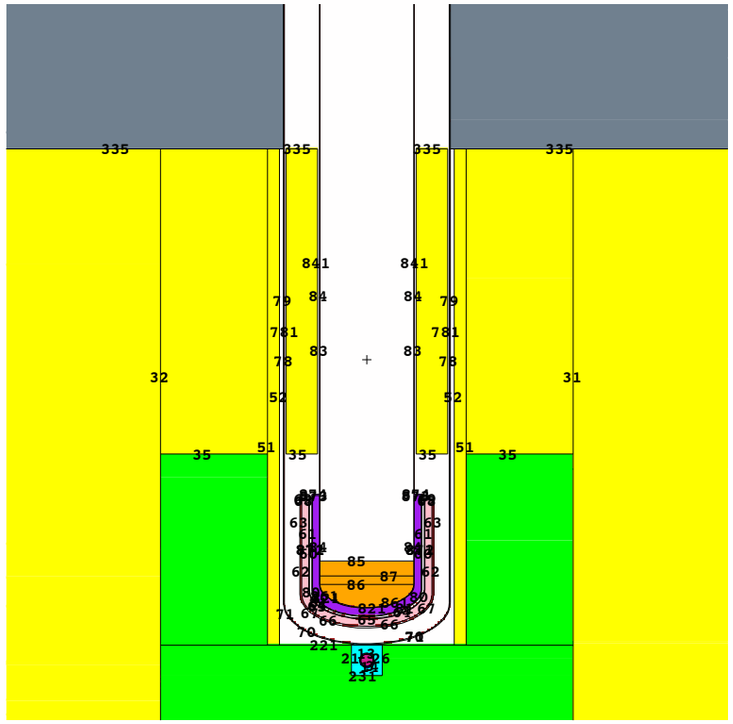

0.87

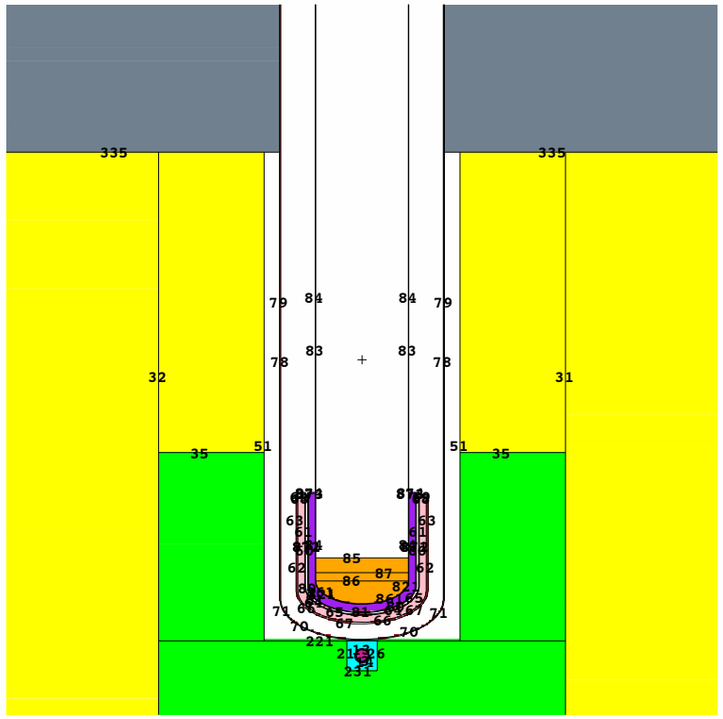

0.75

# Area B Layout

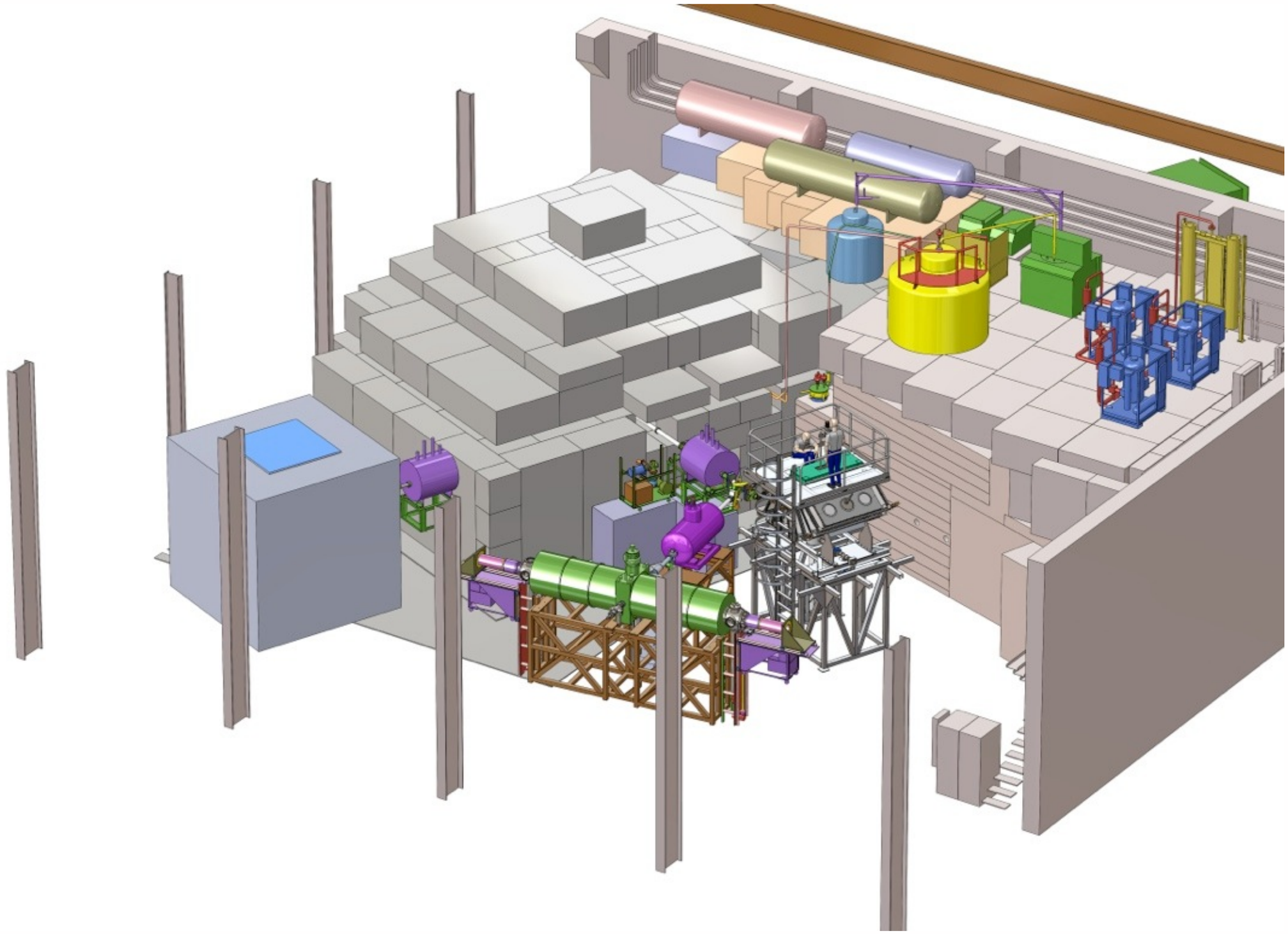

# Area B Layout

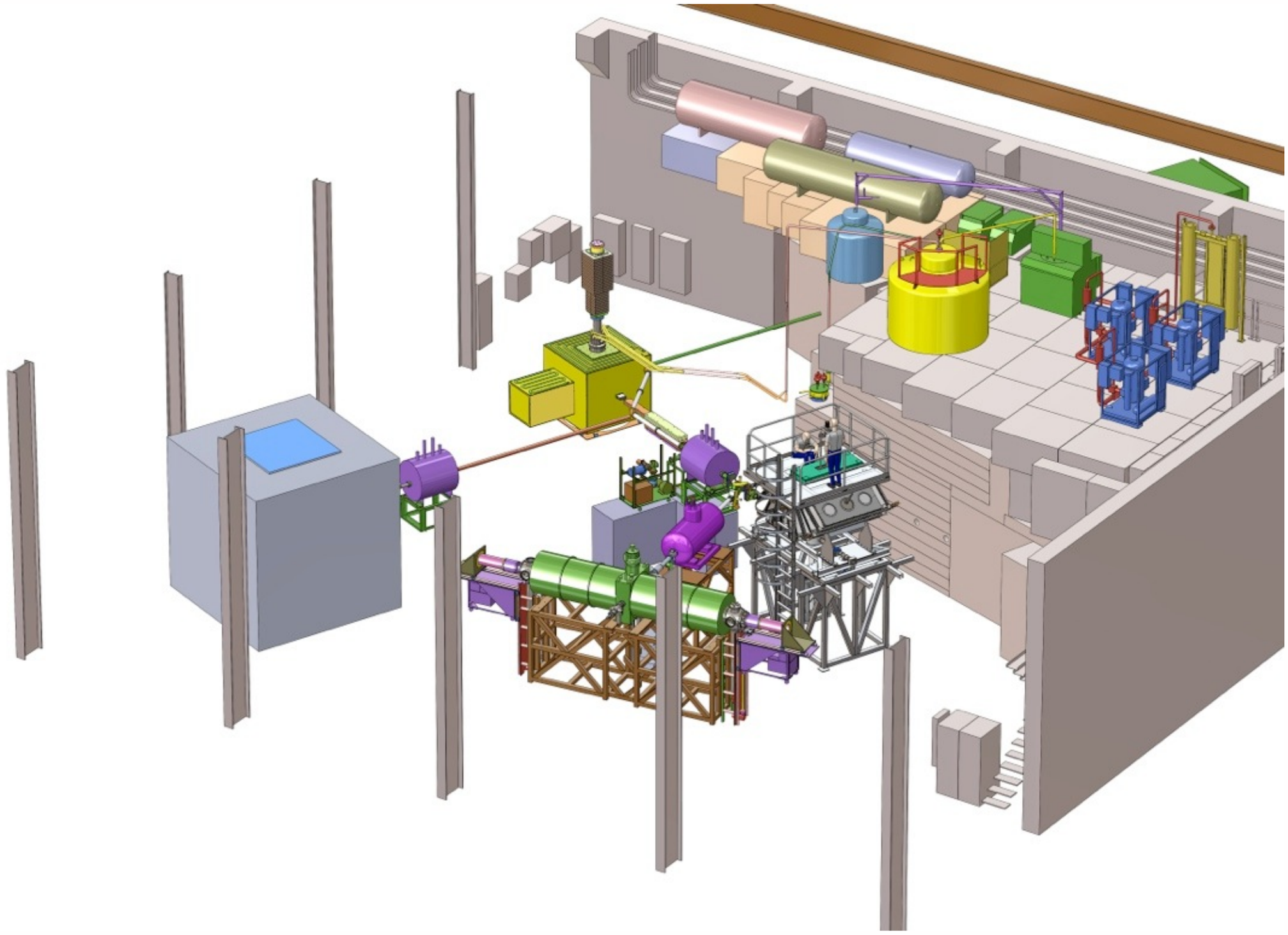

# UCN transport simulation: Geometry and Parameters

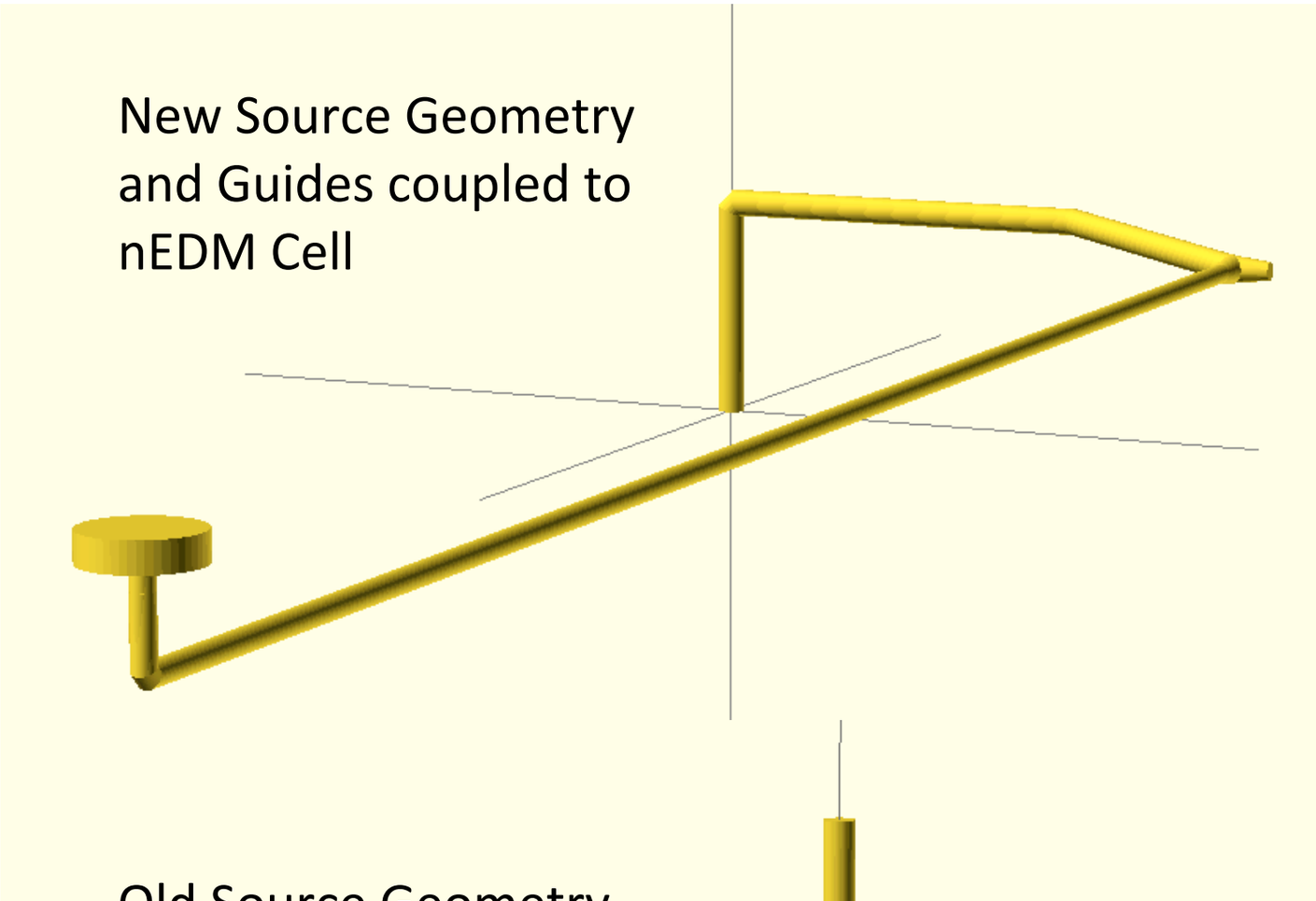


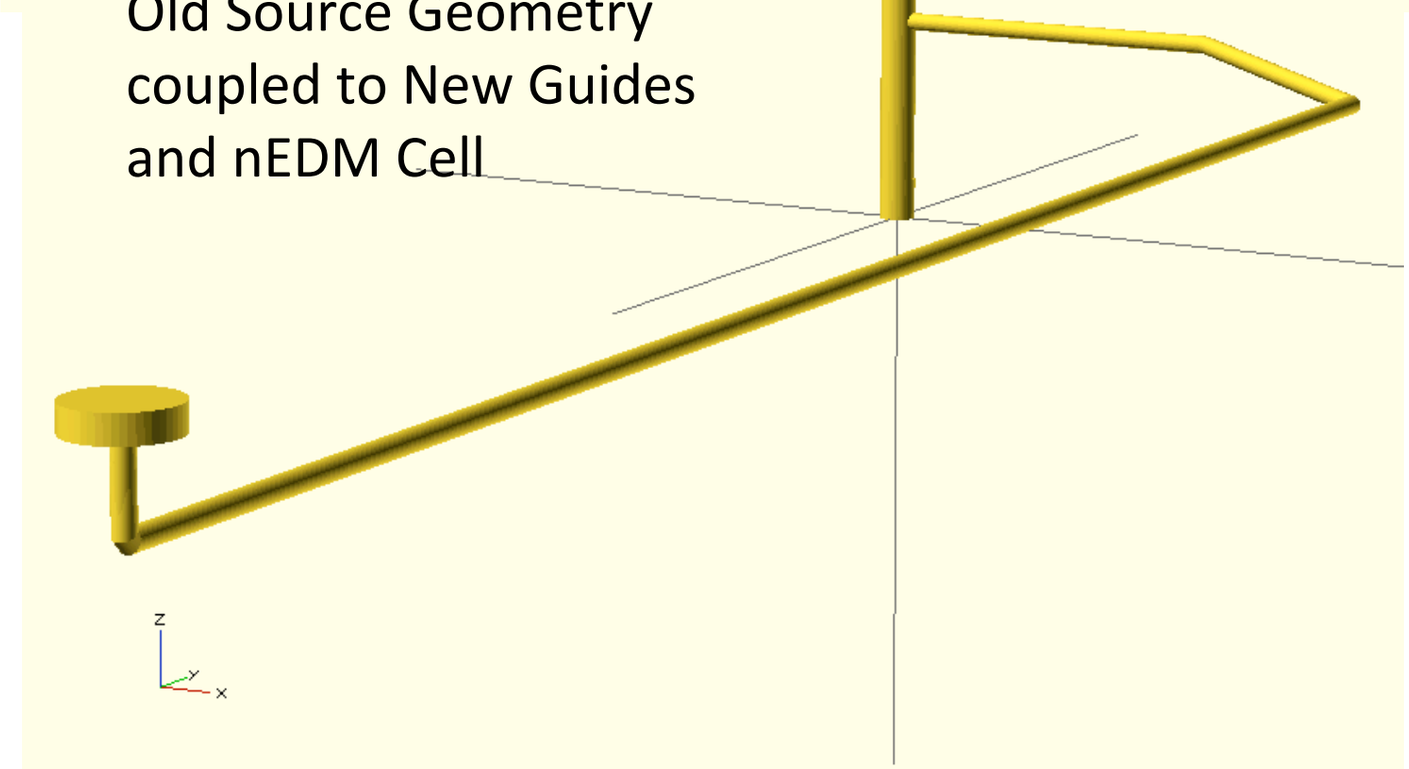


Old Source Diameter 7.87”
New Source Diameter 5.76”
[D(Old)/D(New)]^2 = 1.87

Simple model for wall interactions in the guides:

- Loss per bounce 3e-4 (independent of energy)
- Non-specularity 3%
- Vf(guides) = 184 neV

Cell parameters:

- Loss per bounce 1e-4
- Non-specularity 100%
- Vf(side) = 91 neV (quartz)
- Vf(top&bottom) = 220 neV (DLC)

Beam parameters:

- 10 uA average current
- 30 s beam gate spacing
- 2 s gate width (flapper open 2.25 s)

# Comparison of nEDM Cell Loading

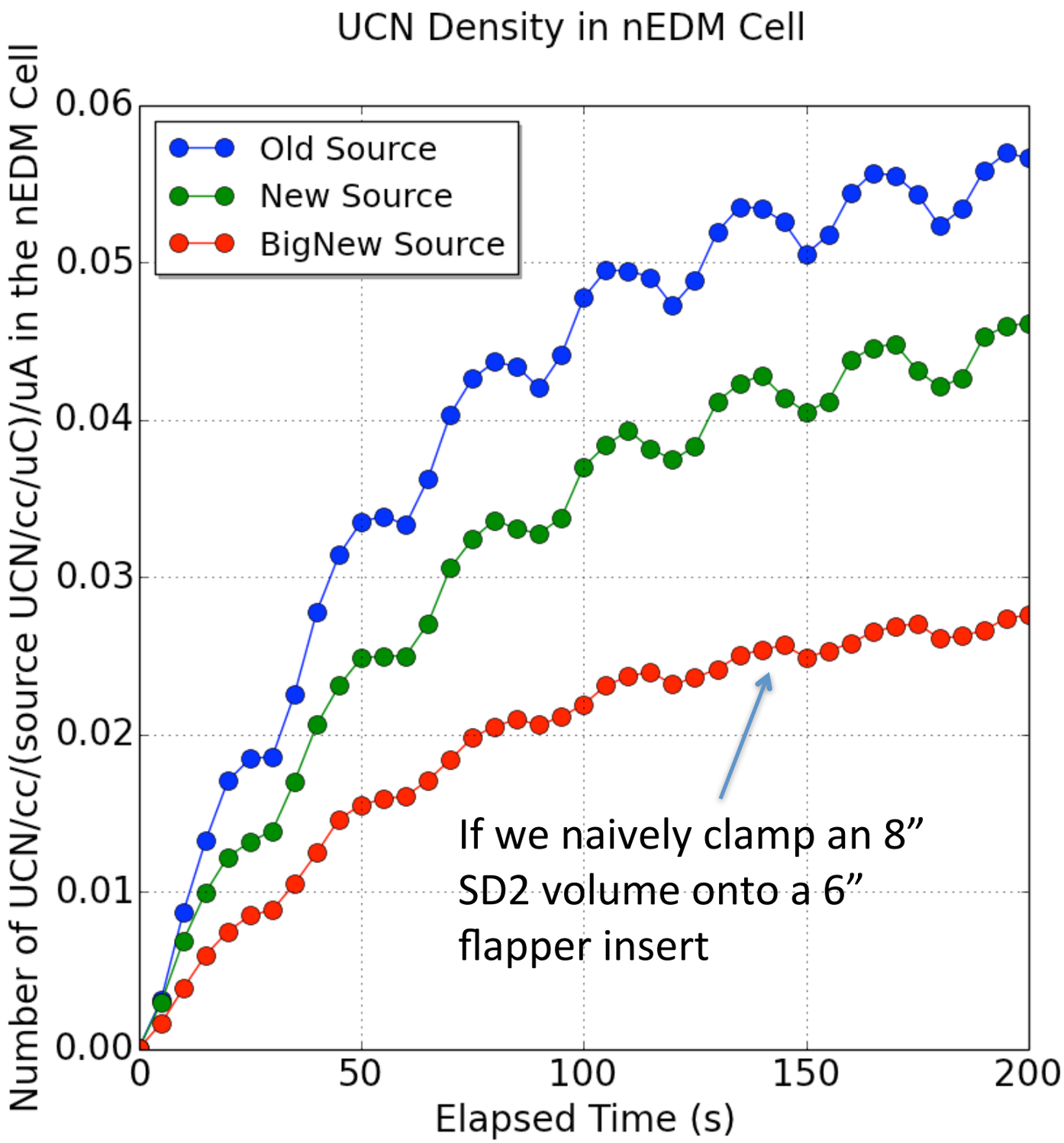


- Old source: approx. 100 UCN/cc/uC in the SD2.
- New source: MCNP prediction approx. 400 UCN/cc/uC in SD2.
- SD2 surface area $A_{old}/A_{new}$ = 1.9

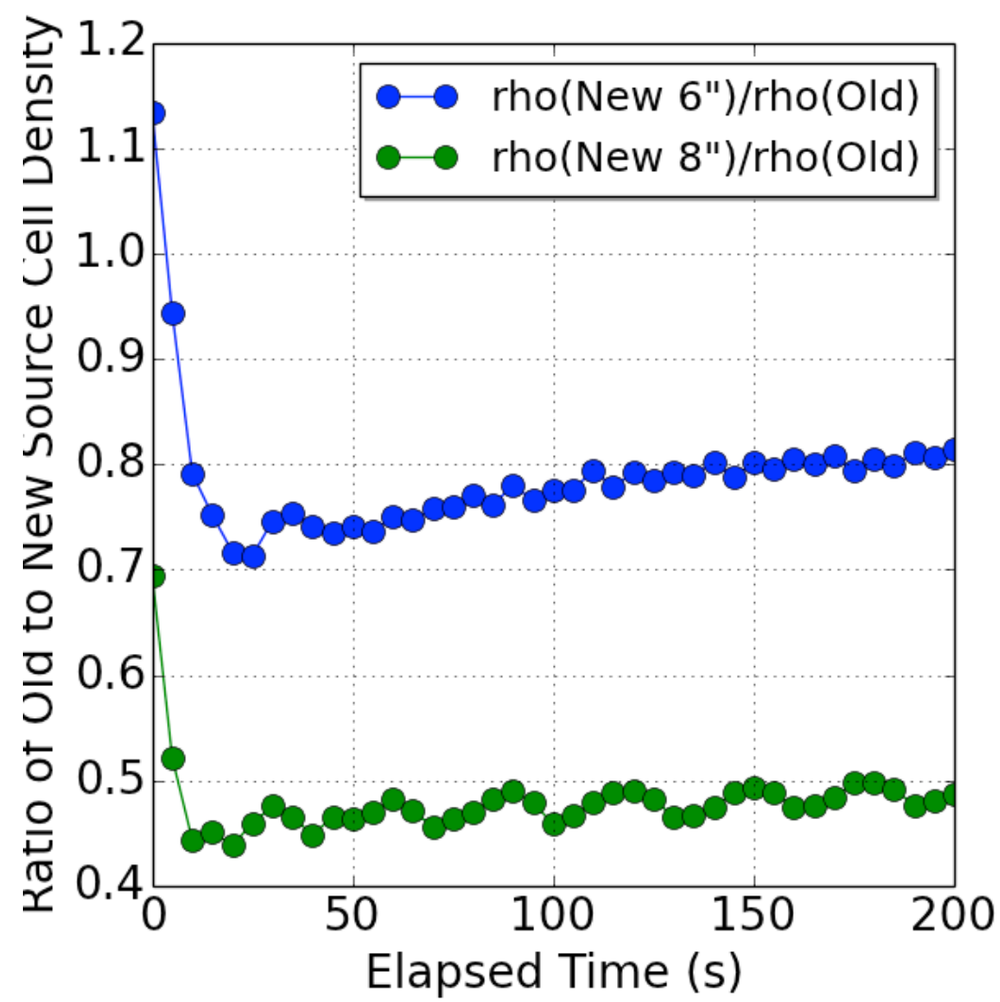

# Cumulative Flux Across SD2 Surface (Flapper Open, UCNs produced at t=0)

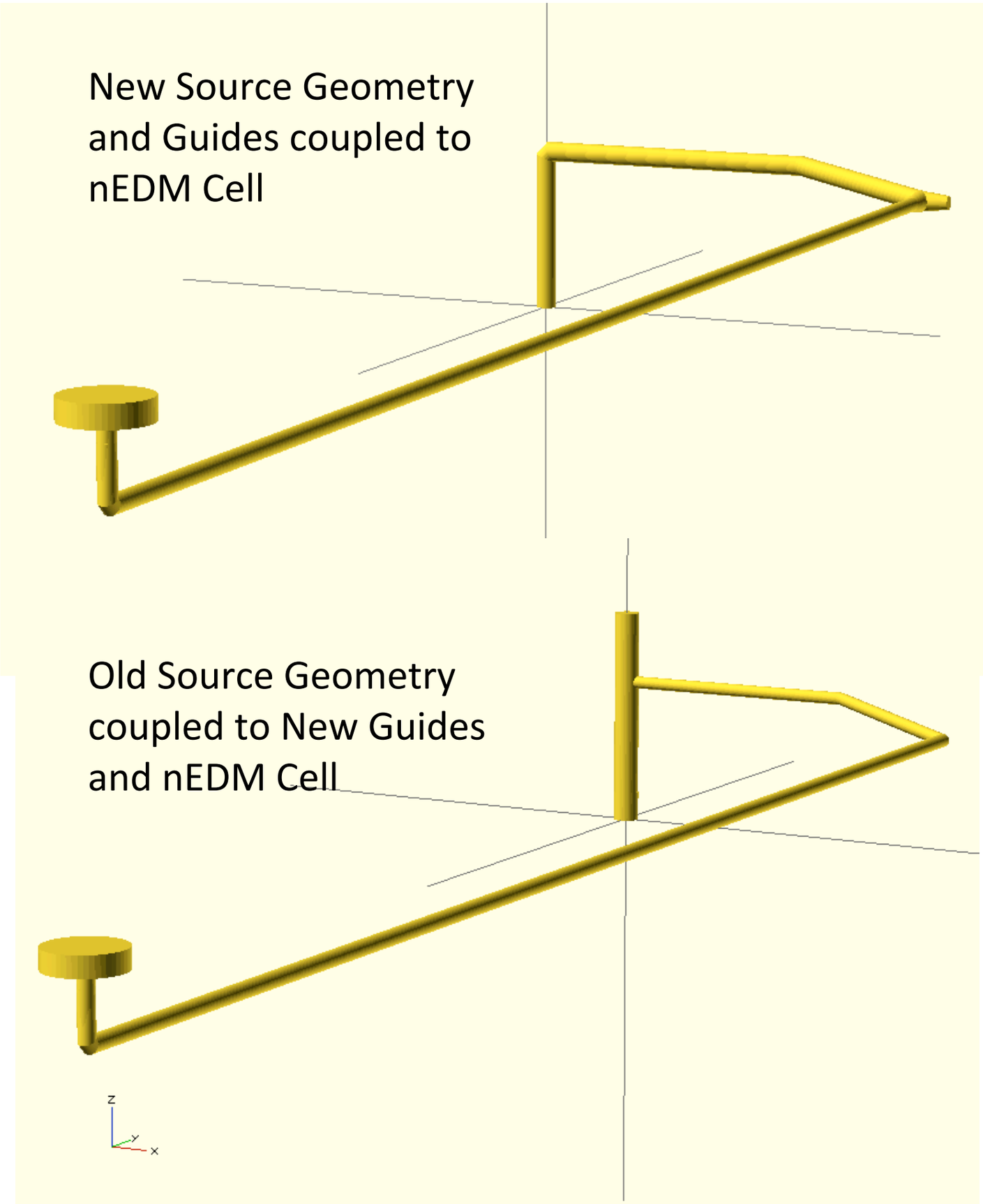


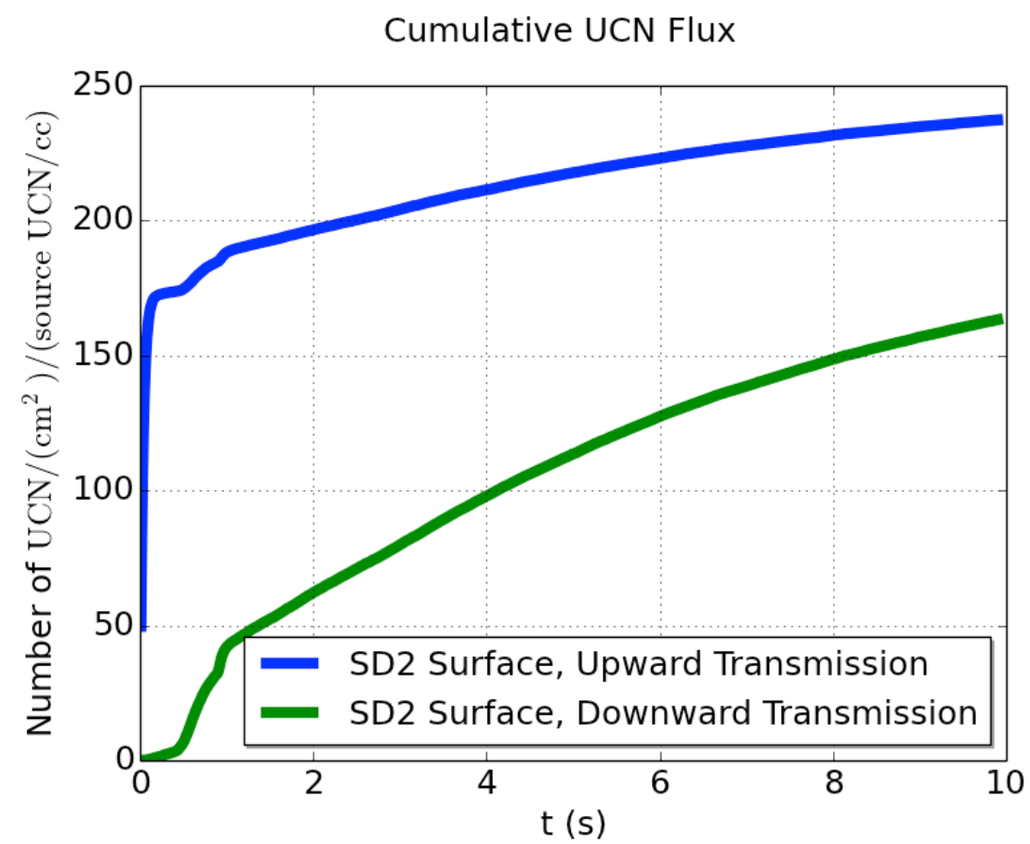


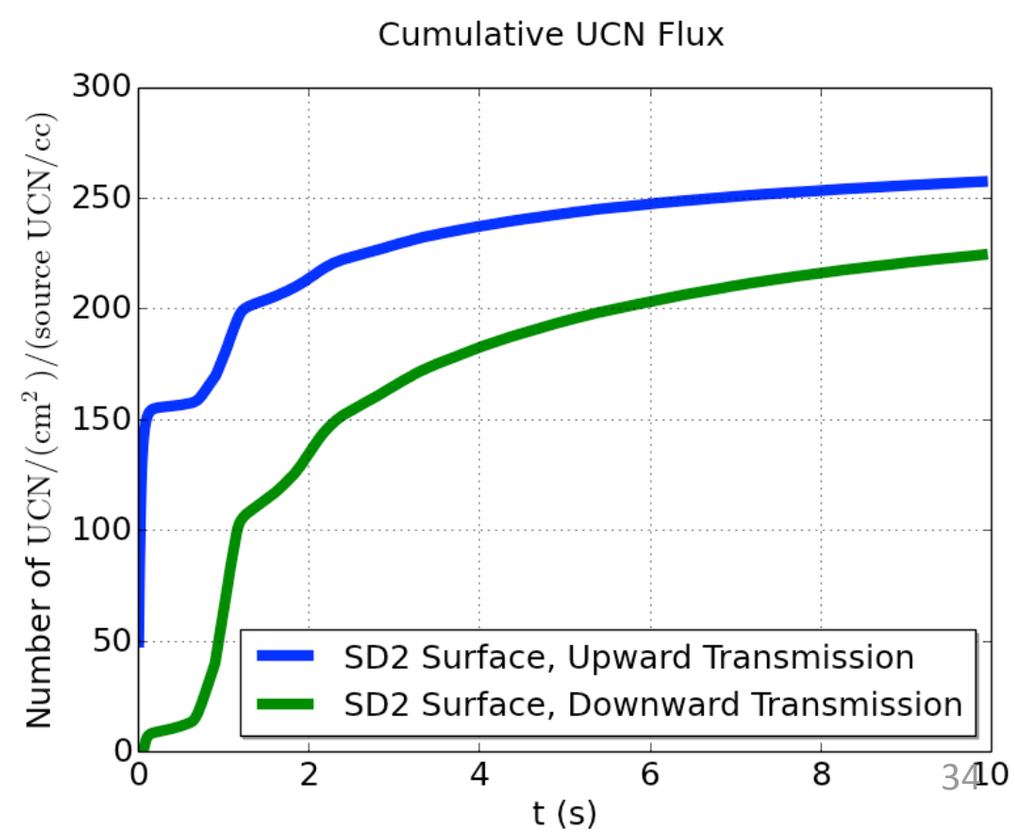

# UCN density predicted by simulation

| Source | Location | Proton Current (μC) | Density (UCN/cc) |
|---|---|---|---|
| **Current** | Source + Guide | 5 | 52 |
| **New** | Source + Guide | 10 | 270 – 540 |
| **New** | nEDM cell | 10 | 150 – 300* |

* Unpolarized density at T = 0

# Engineering design of the new source

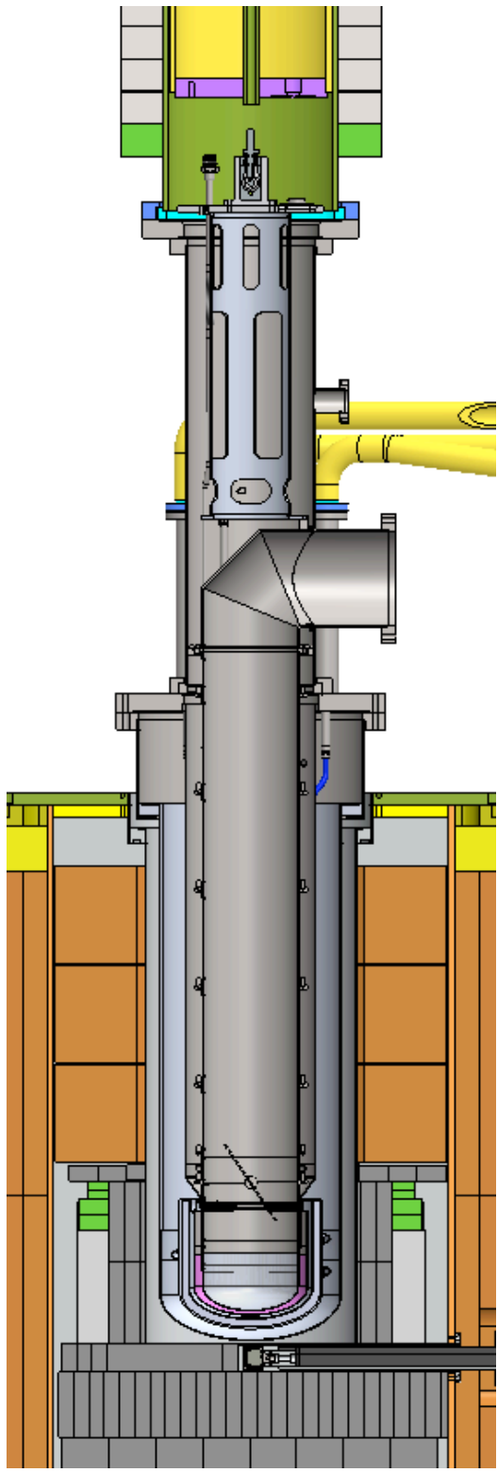

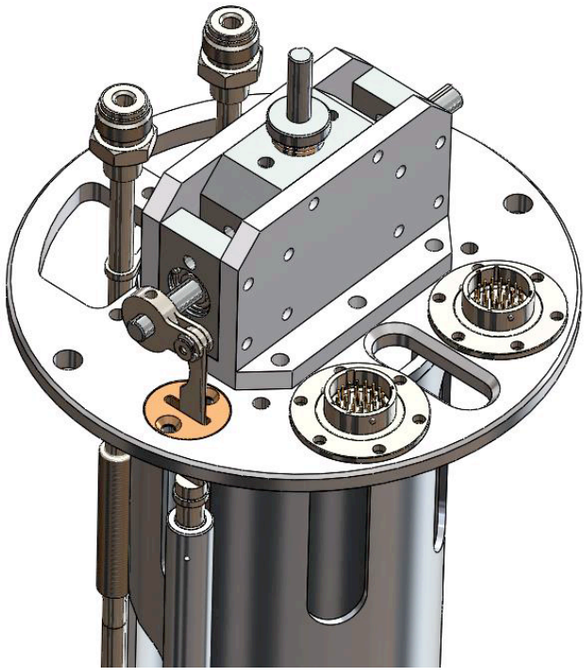

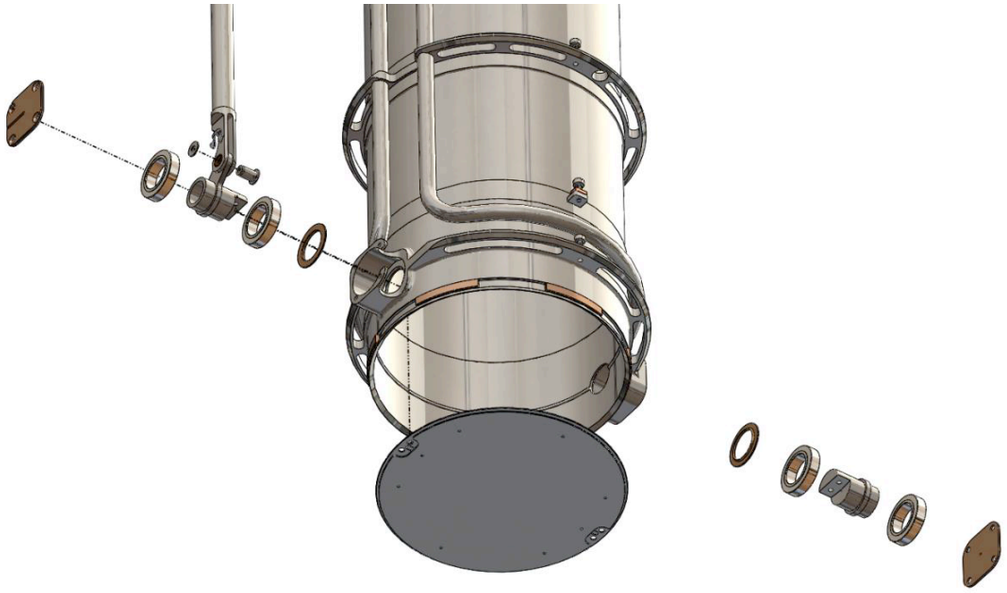

# New source status

- “Flapper valve” assembly and SD2 volume fabricated
- Rest of the source is in the final engineering stage – awaiting input on how to cool the moderator volume

# UCN transport system

- UCN guide baseline design (before the polarizing magnet):
  - Electropolished SS guides
  - Modified conflat joints (minimize gap)
- UCN guide status:
  - Guide components ordered, some of them delivered and vacuum tested
  - They will be tested in the current UCN beam time

- UCN spin polarizer
  - Superconducting magnet
- UCN spin polarizer status
  - Being set up to be tested

# UCN guide preparation

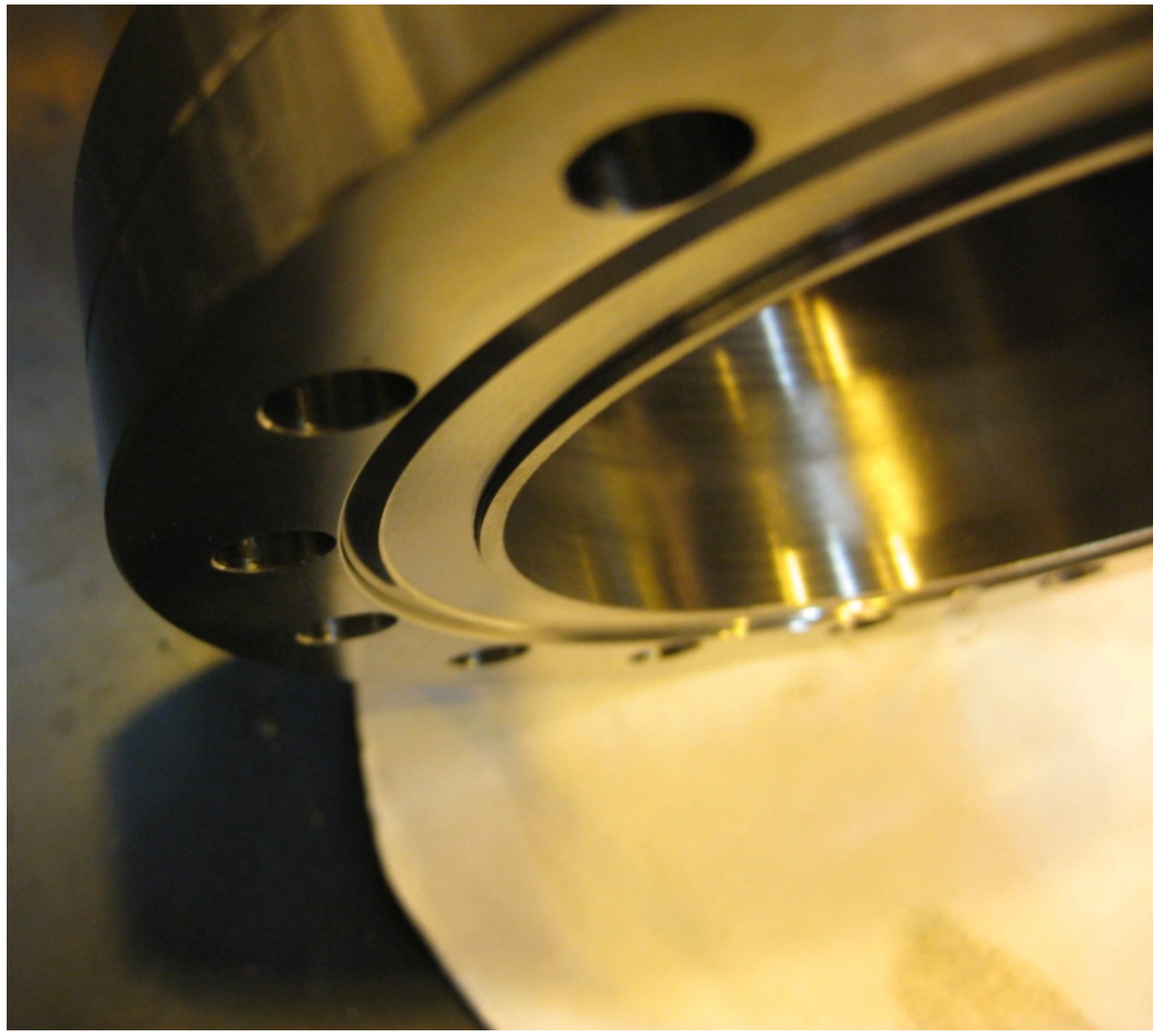

# SC magnet for UCN polarizer

# nEDM cell prototype

- In order for the demonstration of stored UCNs to be meaningful, UCNs need to be stored in a <u>realistic</u> nEDM apparatus prototype that meets minimum requirements:
  - Electric field
  - UCN storage time
  - Compatibility with polarized 199Hg atoms
  - Cell valve
  - Cell switcher
  - Spin polarizer (SC magnet)
  - Spin analyzer
  - UCN detector
  - Magnetic field sufficiently uniform for Ramsey measurement

# Our approach

- Small scale HV test apparatus
  - Study electrode material & shape (esp. at the cathode-insulator junction)
  - Study wall and wall coating materials
- 199Hg magnetometer test apparatus
  - Study wall coating material for spin relaxation and effect of HV reversal
- Cell valve, switcher, spin analyzer, UCN detector
  - Develop based on in-house capability

# Small scale HV test apparatus

- Goal
  - Allow us to gain experience with HV in room temperature vacuum (as opposed to 0.4 K LHe)
  - Study the effect of various gases
  - Test various designs for electrode-insulator wall junction
  - Test various insulator wall and coating material
- Status
  - Vacuum chamber and stand delivered and assembled
  - 200 kV power supply ordered
  - 100 kV power supply also ordered and delivered (will be used for the commissioning of the apparatus)
  - Design of the initial electrodes in progress

# HV Test Chamber

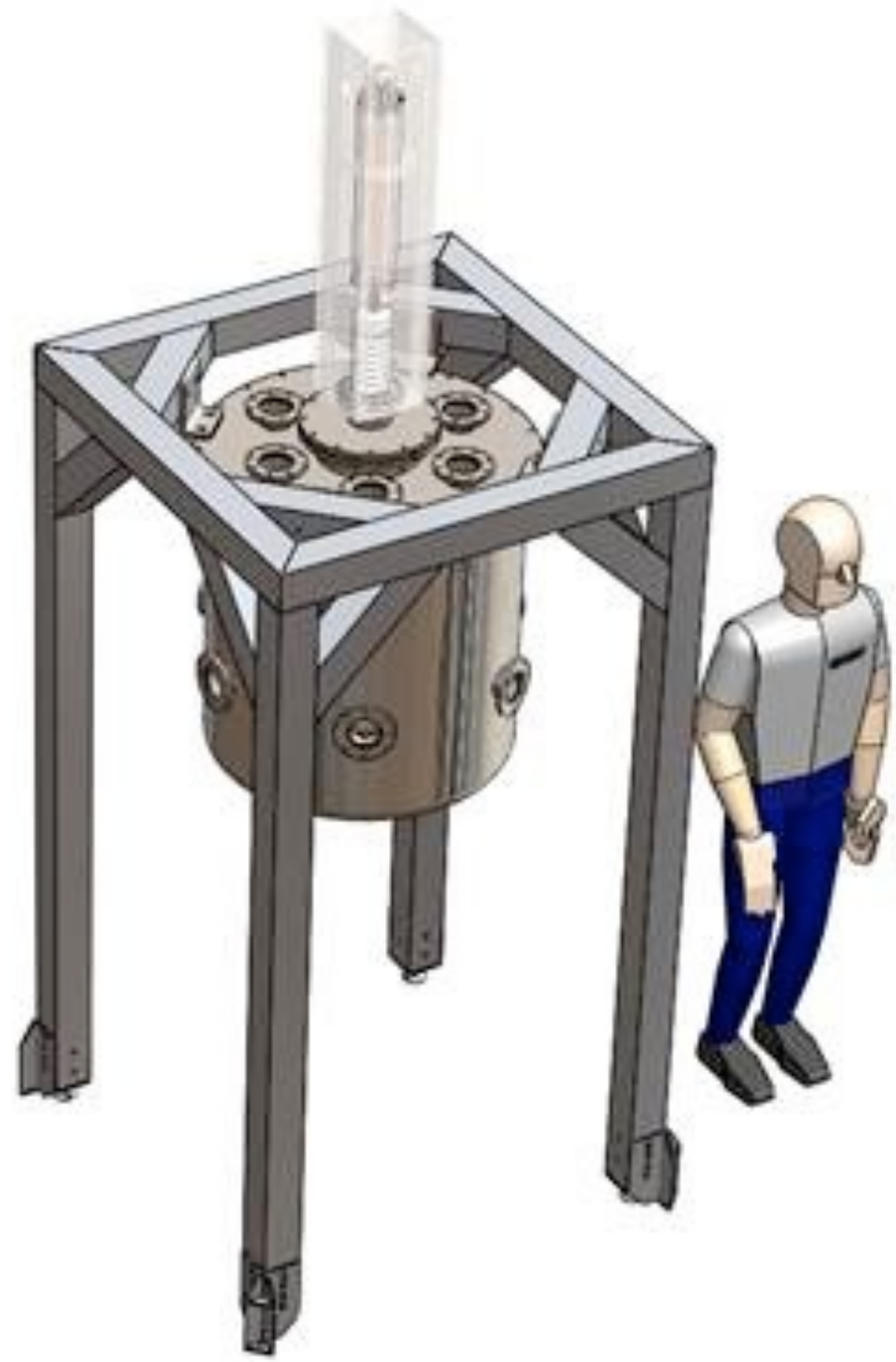

# Hg Comagnetometer

- The basic system will be similar to the ILL experiment with a prepolarization volume and direct optical detection of the $^{199}$Hg precession in the UCN storage cell
- An UV laser to access the 254 nm transition has been acquired and tested; over 40 mW available, need only 500 μW

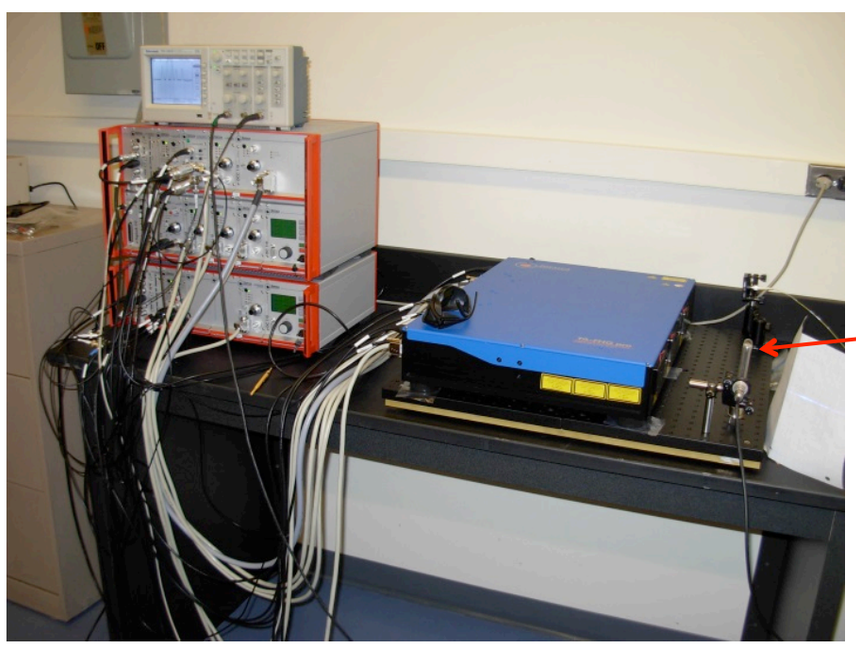

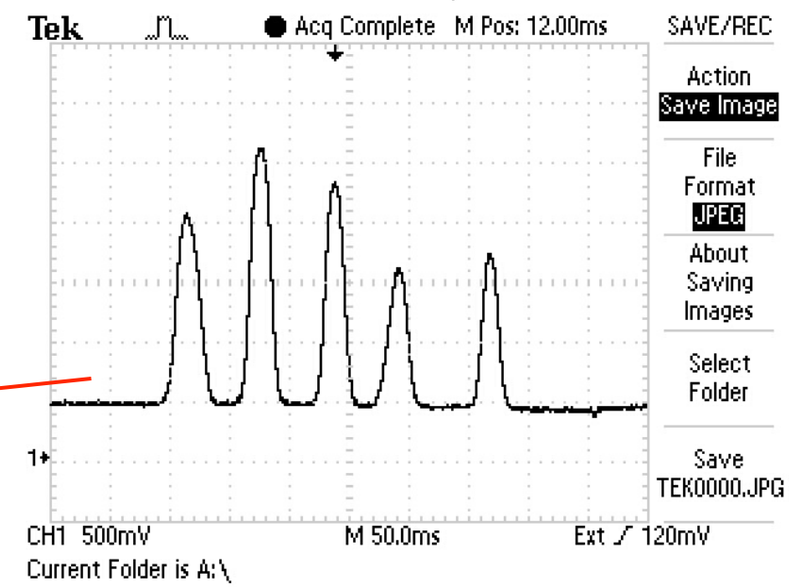


Hyperfine structure of natural Hg observed through laser light scattered by Hg contained in a cell

# Hg Comagnetometer

The optics, prepolarization, 254 nm detection, frequency determination are all well understood and fully developed technologies

The only R&D issue is in regard to the UCN cell wall coating

1. Must have high UCN potential, low UCN loss, low UCN polarization loss (lifetime in excess of 400 seconds)
2. Must have good Hg nuclear polarization storage properties (lifetime in excess of 200 seconds)
3. Properties must be stable under application of high voltage; previous work has shown instabilities

Work done in the early 1990's showed that the instability was due to the generation of contaminants formed by microdischarges when high voltage is applied to the cell. These contaminants were identified and we are developing a technique to neutralize their deleterious effects.

# LANSCE Run Schedule During Risk Mitigation Project

18-Jun-13

For Planning Purposes Only

Version 4.1

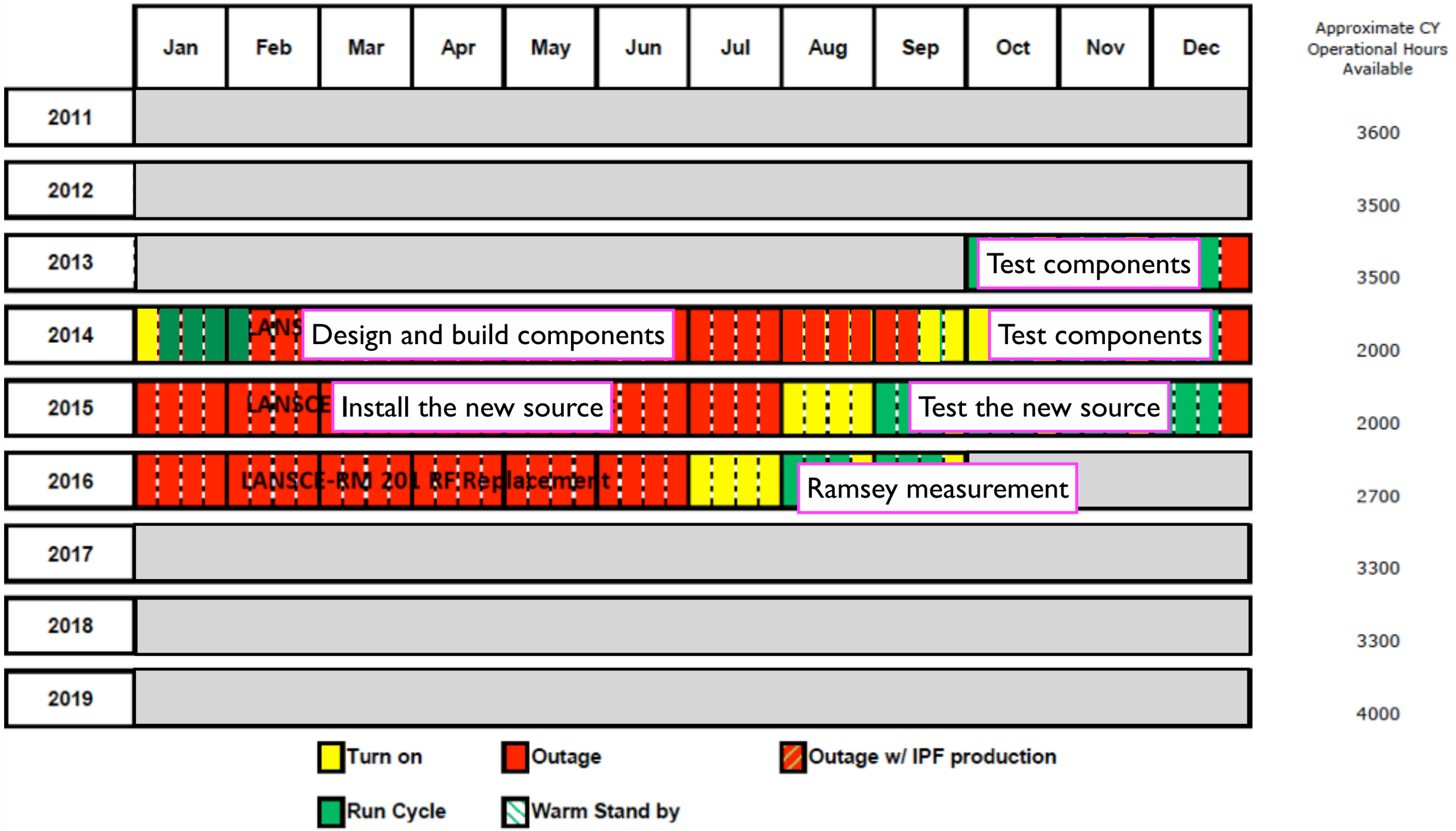


BGS 6/28/2013

# Summary

- R&D toward a new nEDM experiment at LANL is under way
- Simulation & design of the new source and guide system near completion, predicting a factor of ~5 increase in the stored UCN density.
- Installation of the new source and guide system scheduled for summer of 2015.
- R&D efforts on HV, 199Hg comagnetomter, magnetics, UCN detection and spin analysis are under way.