PAUL SCHERRER INSTITUT

^{53}Mn
The Aims, the Needs and the Problems

Rugard Dressler

Dorothea Schumann

CHANDA – workshop on target preparation – the needs and the possibilities
23.-25.11.2015 at Paul Scherrer Institute, Villigen

Cosmogenic Radio-Nuclides

- Produced
  - *via neutron capture reaction*
  - *during explosive phases of star evolution*
  - *in spallation reactions with high energetic cosmic rays*
- Present in the Solar System
  - *as constitute of molecular cloud formed our Sun*
    e.g. found in meteorites
  - *injected from super novae into inter stellar environment*
    e.g. ^{60}Fe
  - *continuously produced at Earth from cosmic rays*
    e.g. ^{7}Be, ^{14}C, ^{53}Mn

^{53}Mn

- produced e.g. in core collapsed SN (type II) via Si/O burning
- Neutron capture
  - *destruction via n, p, and α induce reaction*
  - *^{53}Mn(n_{th}; γ)^{54}Mn*
    - measurable with high sensitivity
- Half-Life $t_{1/2}$= 3.7±0.37 Ma
  - *^{53}Mn – ^{53}Cr chronometer*
    - used to date events in solar system
  - *^{53}Mn / ^{55}Mn isotopic ratio*
    - used to determine the terrestrial exposure time Dry Valleys, Southern Victoria Land, and Antarctica

Final mass fractions of SN II yields in the peak temperature–density plane

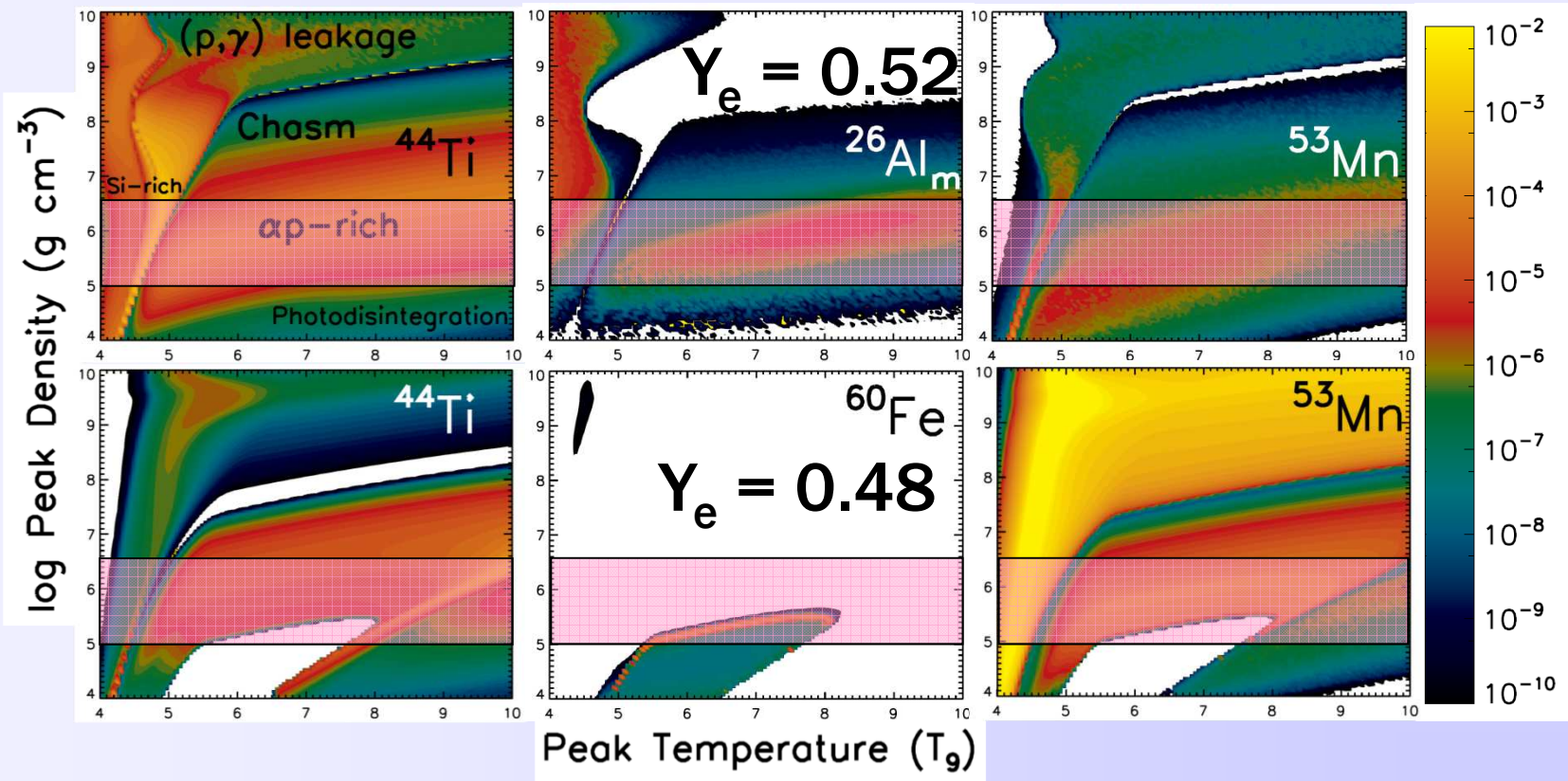

G. Magkotsios, et al.: Astrophys. J. 741 (2011) 78

Galactic chemical evolution mass cut of ^{53}Mn

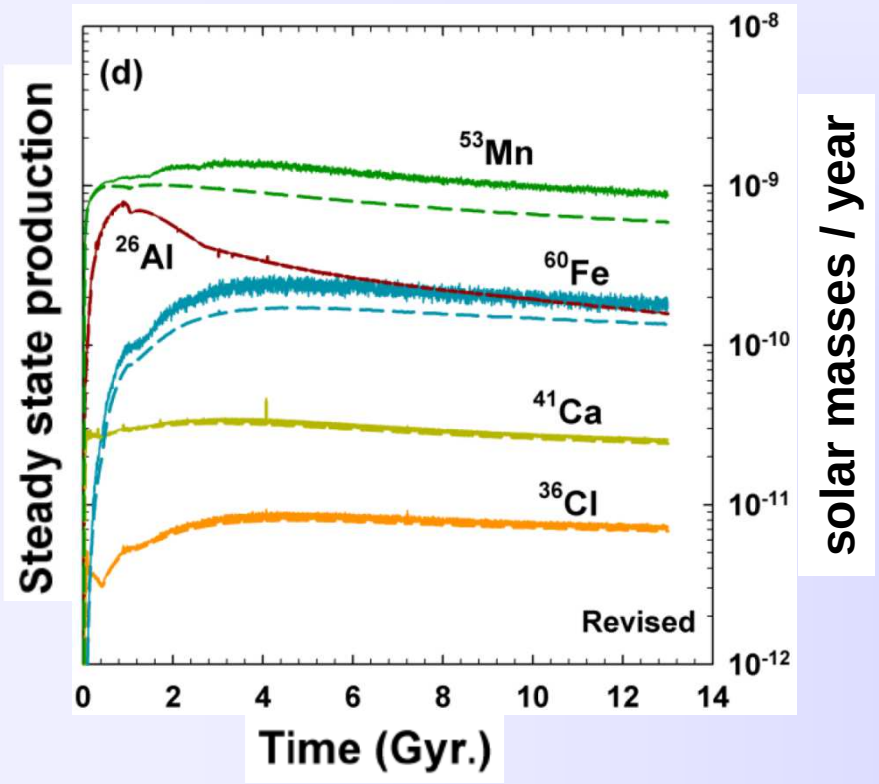

S. Sahijpal: "The evolution of the galaxy and the birth of the solar system: The short-lived nuclides connection." arXive 1402.2790 (2014)

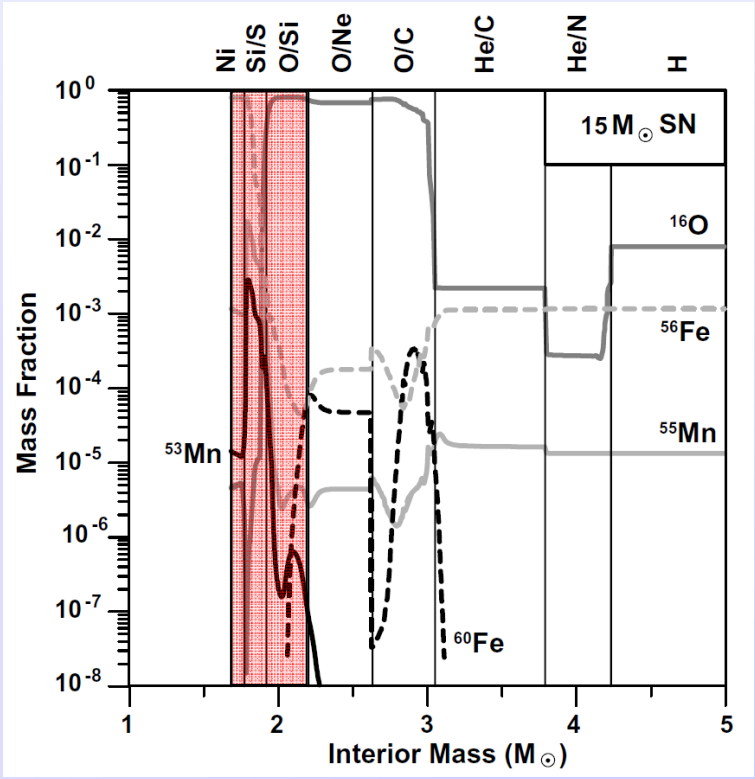

P. Hoppe, et al.: New Astronomy Reviews 52 (2008) 467

^{60}Fe in deep sea Fe-Mn crust

- ^{60}Fe horizon at 2.8 Ma
  - *Based on ^{10}Be $t_{1/2}$ = 1.51 Ma*
- Produced by a super nova
- 40 pc distance from Earth

- Is there a ^{53}Mn horizon?

B.J. Fry, et al.:
Astrophys. J 800 (2015) 71

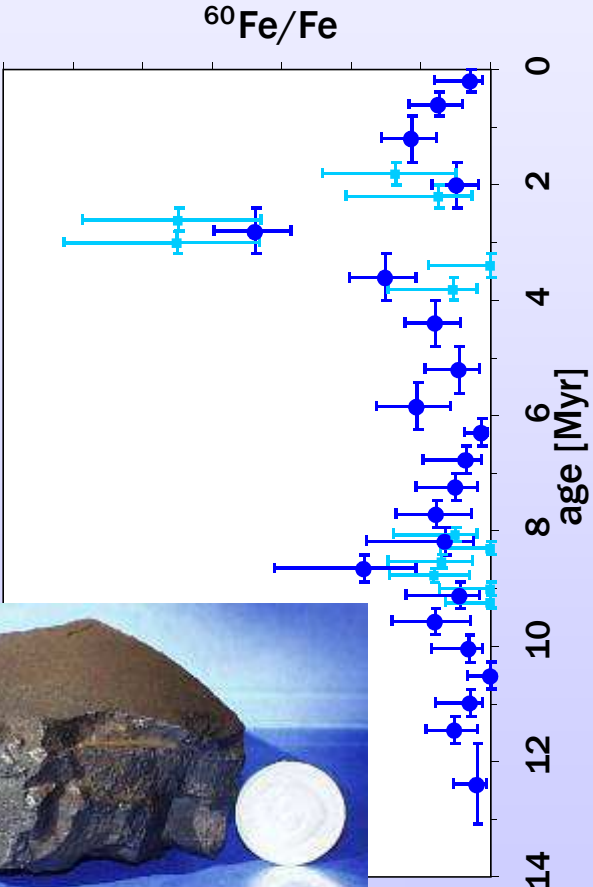

K. Knie, et al.: Phys. Rev. Lett. **93** (2004) 171103

Changes in TALYS predictions

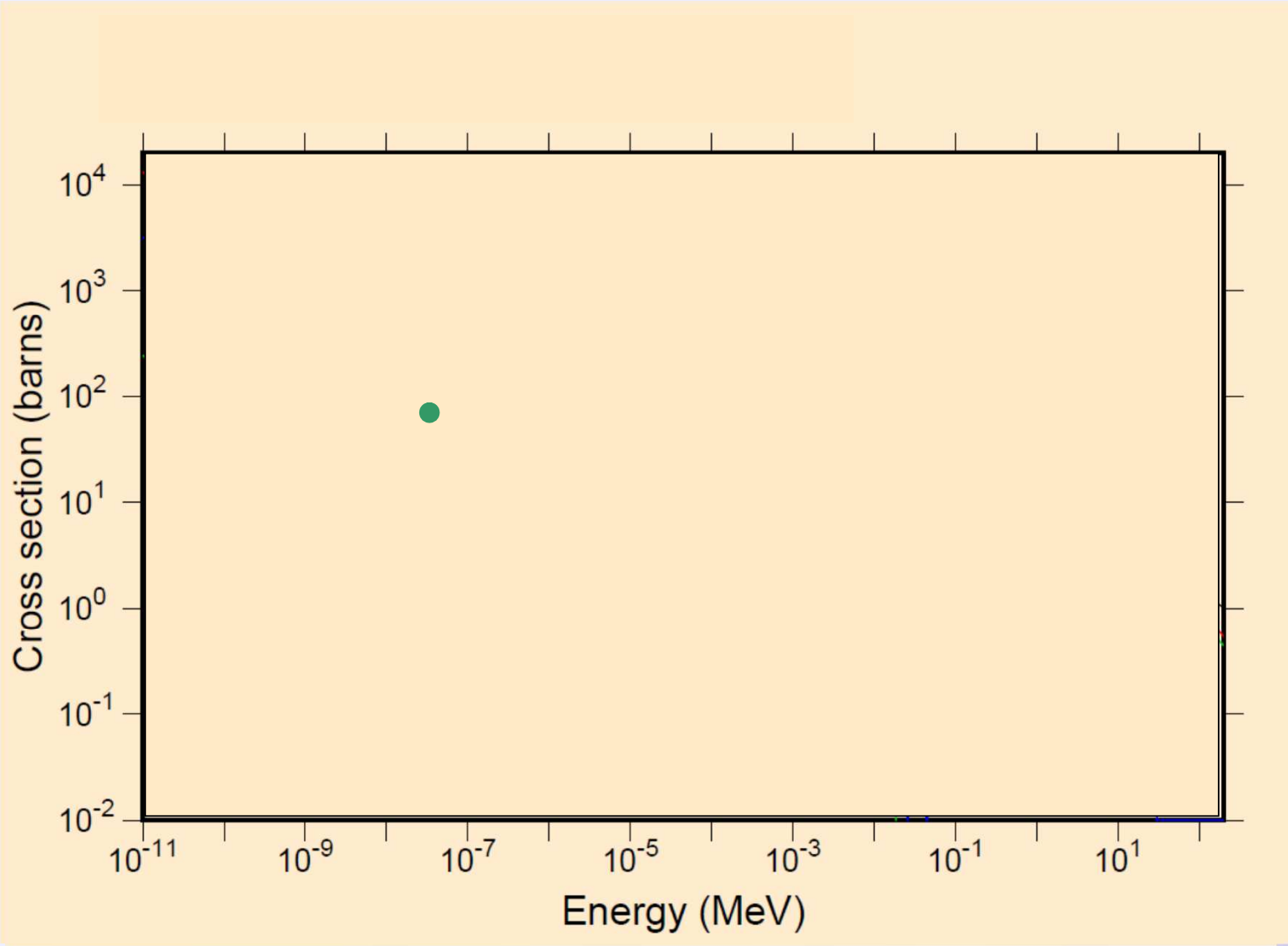

Dating with ^{53}Mn

- *^{53}Mn – ^{53}Cr chronometer*
  - date early events in solar system
- *^{53}Mn / ^{55}Mn isotopic ratio*
  - used to determine terrestrial exposure time (15 Ma)

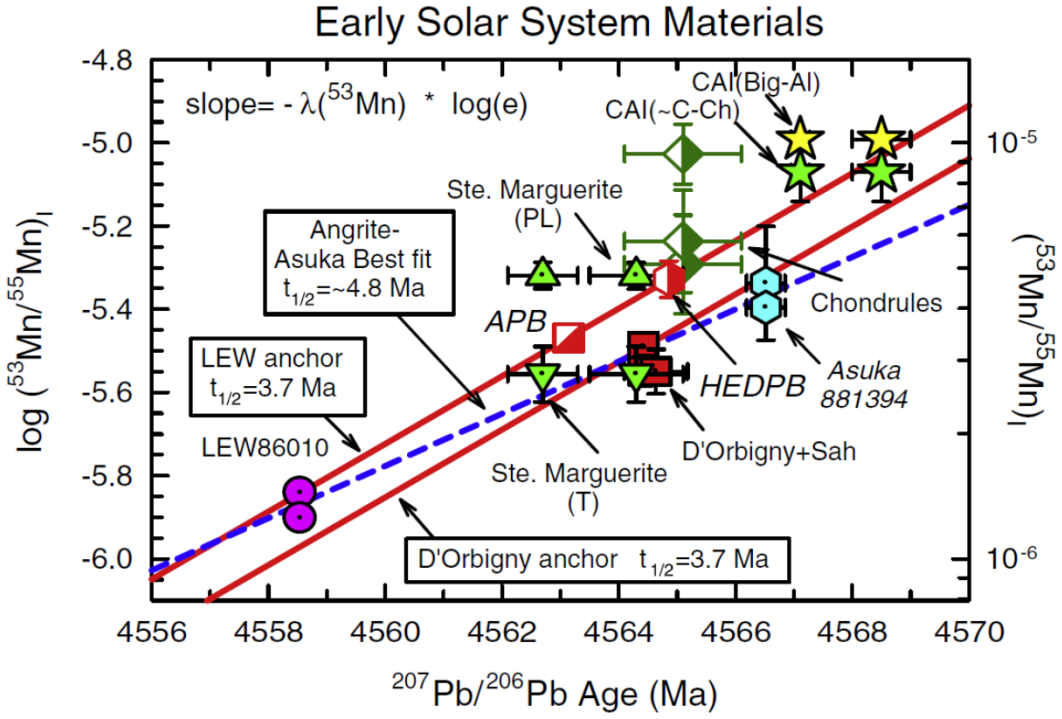

L.E. Nyquist, et al.: Geochim. Cosmochim. Acta 73 (2009) 5115

Half-Life Measurement

$$t_{1/2} = \ln(2)\frac{N}{A}$$

Determination of sample activity A

- α- / β- / γ-Spectroscopy or Liquid Scintillation Counting

Determination of number of atoms N

- AMS / ICP-MS / HI-ERD
  - ^{10}Be $t_{1/2}$ = 1.388 ± 0.018 Ma
    G. Korschinek, et al.: Nucl. Instr. and Methods B 268 (2010) 187
  - ^{79}Se $t_{1/2}$ = 0.327 ± 0.008 Ma
    G. Jörg, et al.: Applied Radiation and Isotopes 68 (2010) 2339
  - ^{60}Fe $t_{1/2}$ = 2.62 ± 0.04 Ma
    G. Rugel, et al.: Phys. Rev. Lett. 103 (2009) 072502

    ^{60}Fe $t_{1/2}$ = 2.50 ± 0.12 Ma
    A. Wallner , et al.: Phys. Rev. Lett. 114 (2014) 041101

^{53}Mn Half-Life Measurements

Author (Year)	Method	$t_{1/2}$ [Ma]
Wilkinson, et al. (1955)	Compared nuclear reaction yield with ^{54}Mn	0.00014
Sheline, et al. (1957)	Calculated nuclear reaction yield	~2
Kaye, et al. (1965)	Spallation yield of meteorites	1.9±0.5
Hohlfelder (1969)	Mass spectrometry (MS) of meteorites	10.8±4.5
Matsuda, et al. (1971)	MS of 730 MeV proton activation products	2.9±1.2
Honda, et al. (1971)	MS of artificial and meteoritic samples	3.7±0.37
Wölfle, et al. (1972)	Neutron activation of meteoritic samples	3.9±0.6
Heimann, et al. (1974)	decay of meteoritic ^{53}Mn	3.85±0.4
Yoneda, et al. (2002)	MS of meteoritic samples	3.00±0.15
Meier (2006) Poutivtsev (2007)	Comparison of different meteoritic ^{53}Mn standards using AMS	4.10±0.25

Measurements performed with limited amount of material
10^{11} to 10^{13} atoms of ^{53}Mn extracted from meteorites.

Half-life uncertainty 2% needed for used of ^{53}Mn as chronometer.

SINQ Target-Irradiation Program
STIP sample

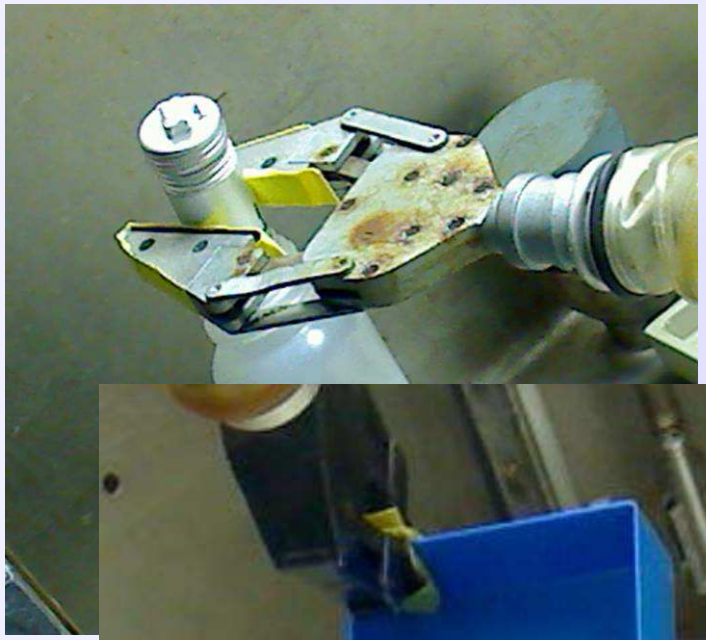

STIP samples

STIP sample

- diff. types of miniature specimens
- diff. structure materials used
- prepared by diff. participating labs
- placed at diff. positions in SINQ targets
- irradiated for the whole operation time
- mechanically tested after cool down period
- radioactive waste afterwards

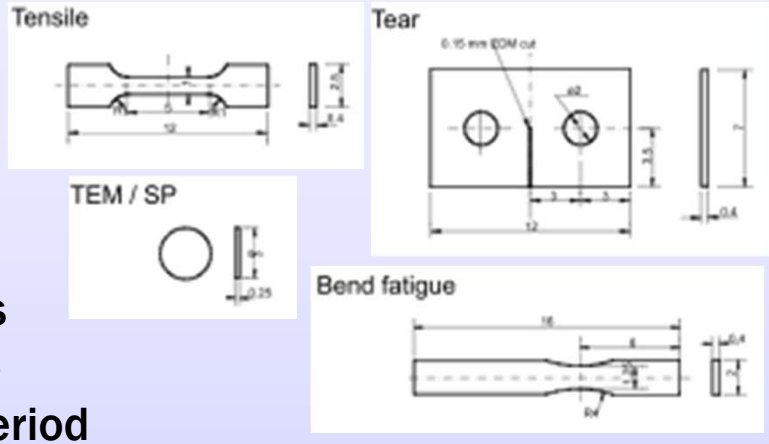

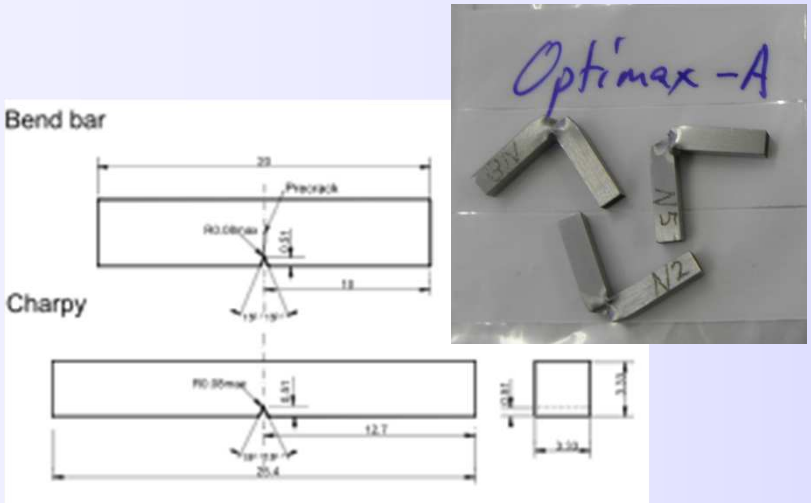

STIP analytics (May 2011)

- total used material ~ 60 g
  9.5% Cr, 1% W, 0.5% Mn, 0.25% V
- radio nuclides available

^{26}Al 300 Bq ≈ 9.8×10^{15} atoms
^{44}Ti 135 MBq ≈ 1.1×10^{18} atoms
^{54}Mn 70 MBq ≈ 6.7×10^{12} atoms
^{53}Mn 173 kBq ≈ 2.9×10^{19} atoms

^{60}Co 70 MBq

R. Dressler et al.: J. Phys. G **39** (2012) 105201

Separation scheme of STIP samples

STIP sample

10^{24} atoms Fe

dissolution in 8 M HCl + conc. HNO_3

Fe, Cr, Ni, Mo, Mn, Co, Al, Ti

extraction into di-ethyl-ether

organic phase
$FeCl_4$ MoO_2Cl_3

aqueous phase
Cr Ni Mn Co Al Ti traces of Fe and Mo

precipitation with NH_3

filtrate
CrO_4^{2-} $[Ni(NH_3)_6]^{2+}$
MoO_4^{2+} $[Co(NH_3)_6]^{2+}$

precipitate
$Al(OH)_3$ $Fe(OH)_3$ $Ti(OH)_4$ $Cr(OH)_3$ $Mn(OH)_2$

dissolution in 1 M HCl
precipitation with H_2O_2 + NaOH

filtrate $[Al(OH)_4]^-$ CrO_4^{2-}

precipitate $Fe(OH)_3$ $Ti(OH)_4$ MnO_2

dissolution in 7 M HCl
extraction with di-ethyl-ether

~10^{24} atoms Fe

organic phase Fe

aqueous phase Ti, Mn, Cr

Fe separation factor 10^{-4}

ion exchange DOWEX 1 with 10 M HCl

aqueous phase Mn^{2+}, Cr^{3+}

tanks to Björn Dittmann

precipitation with urotropin

precipitate $Cr(OH)_3$

filtrate Mn^{2+}

10^{19} atoms ^{53}Mn

Characterization of final product

AMS measurements @ ANU (Canberra)

- ^{53}Mn total amount 2.44×10^{19} atoms

ICP-MS measurements @ PSI (Villigen)

- $^{53}Mn/^{55}Mn = 0.013761(31)$
- Mn concentration = 24.79(46) ug/ml
- $^{53}Cr/^{53}Mn = 0.0006(2)$
- $^{53}Cr/^{55}Mn = 6\times10^{-6} – 1\times10^{-5}$

Planned Experiments

Half-Life measurement

- absolute activity determination
  - *TDCR liquid scintillation counting*
  - *Lo-level x-ray counting*
- determination of number of atoms
  - *ICP-MS*
  - *AMS*

Neutron capture cross section

- at thermal, cold and ultra-cold energies @ PSI
- at EAR-2 n_TOF CERN

Neutron Capture Cross-Section ^{53}Mn

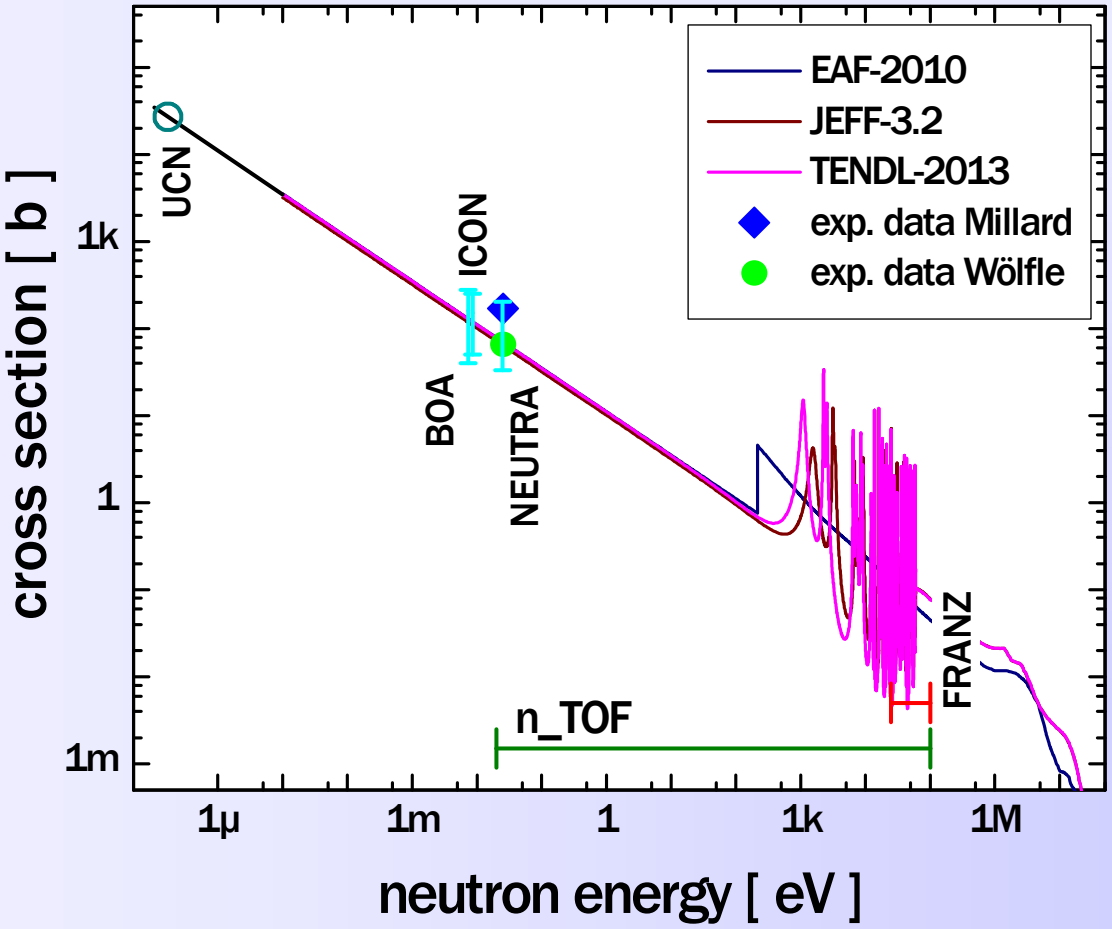

The n_TOF facility at CERN

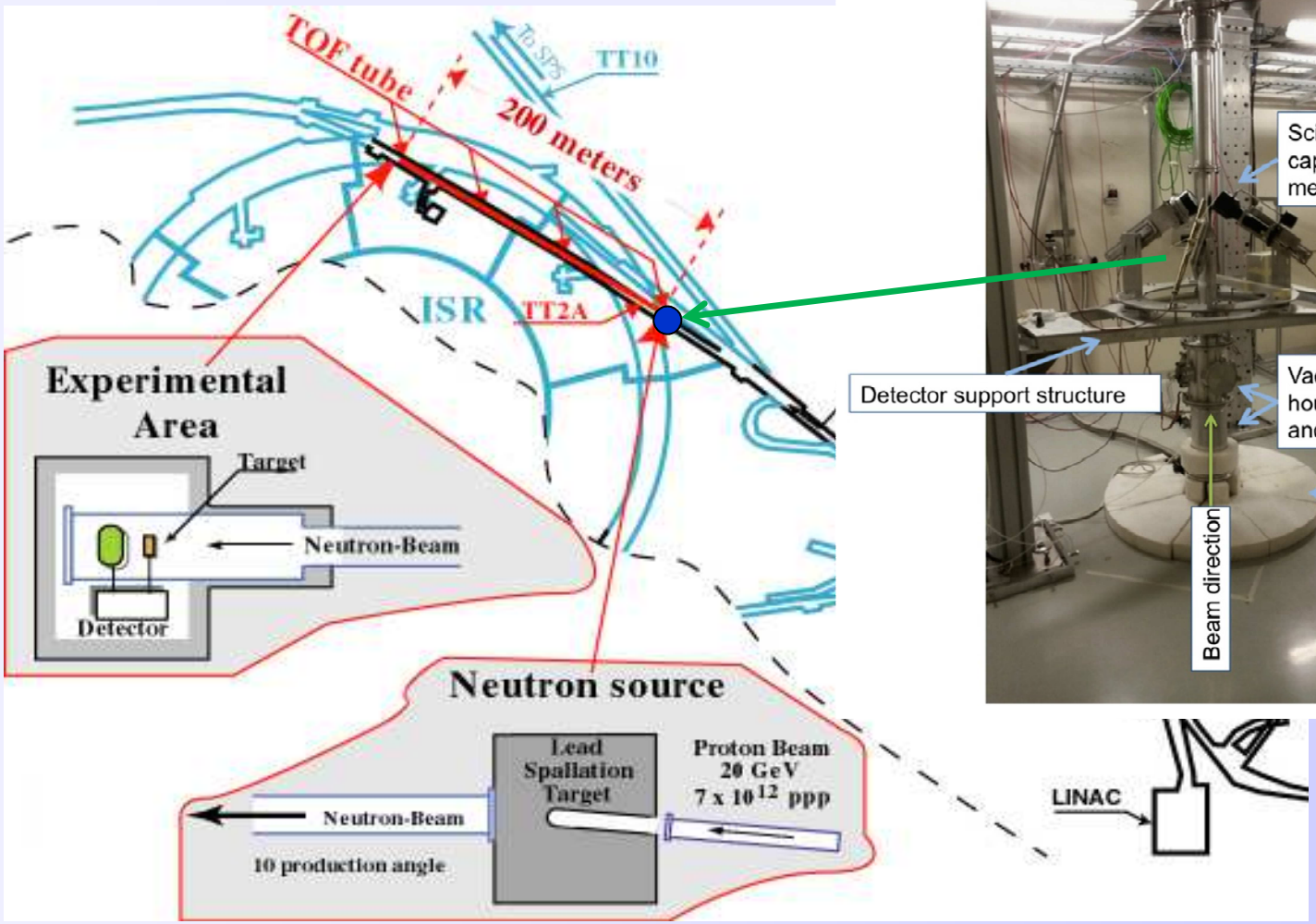

EAR-2

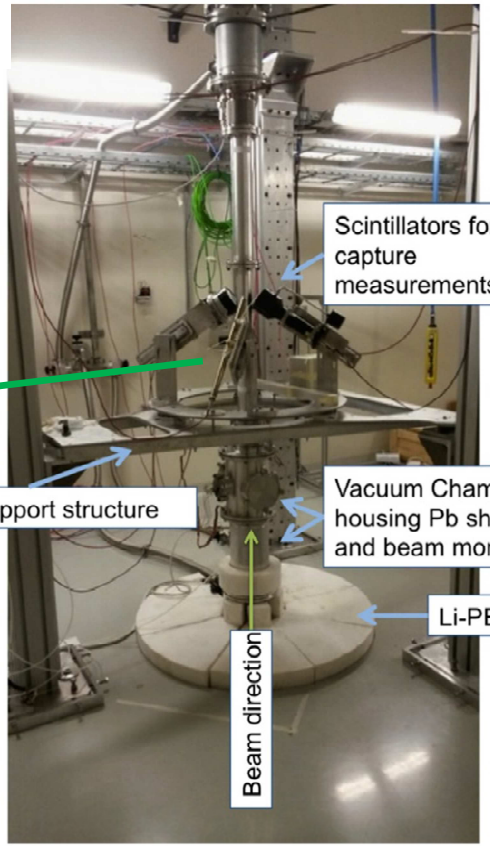

Ch. Weiss, et n_TOF: NIM A799 (2015) 90

^{53}Mn(n, γ) at EAR-2

Sample from ERAWAST

- Extract $2 \cdot 10^{19}$ atoms ^{53}Mn from STIP samples
- Purified from Fe and Cr (<0.01% leftovers)

Estimation of detection yield per $2.5 \cdot 10^{18}$ protons

- sample with $5 \cdot 10^{17}$ atoms ^{53}Mn; diameter 2.0 cm
- 2 C_6D_6 detectors with total 14% detection efficiency
- only capture cross section taken into account
- no background considerations
- counts per proton pulse estimated via
  $Y_{Pulse}(E_{Bin}) \approx \varepsilon_{Det} \cdot \rho_{Target} \cdot N_{Pulse}(E_{Bin}) \cdot \langle \sigma(E_{Bin}) \rangle$

^{53}Mn signal @ EAR-2

100 bins per energy decade

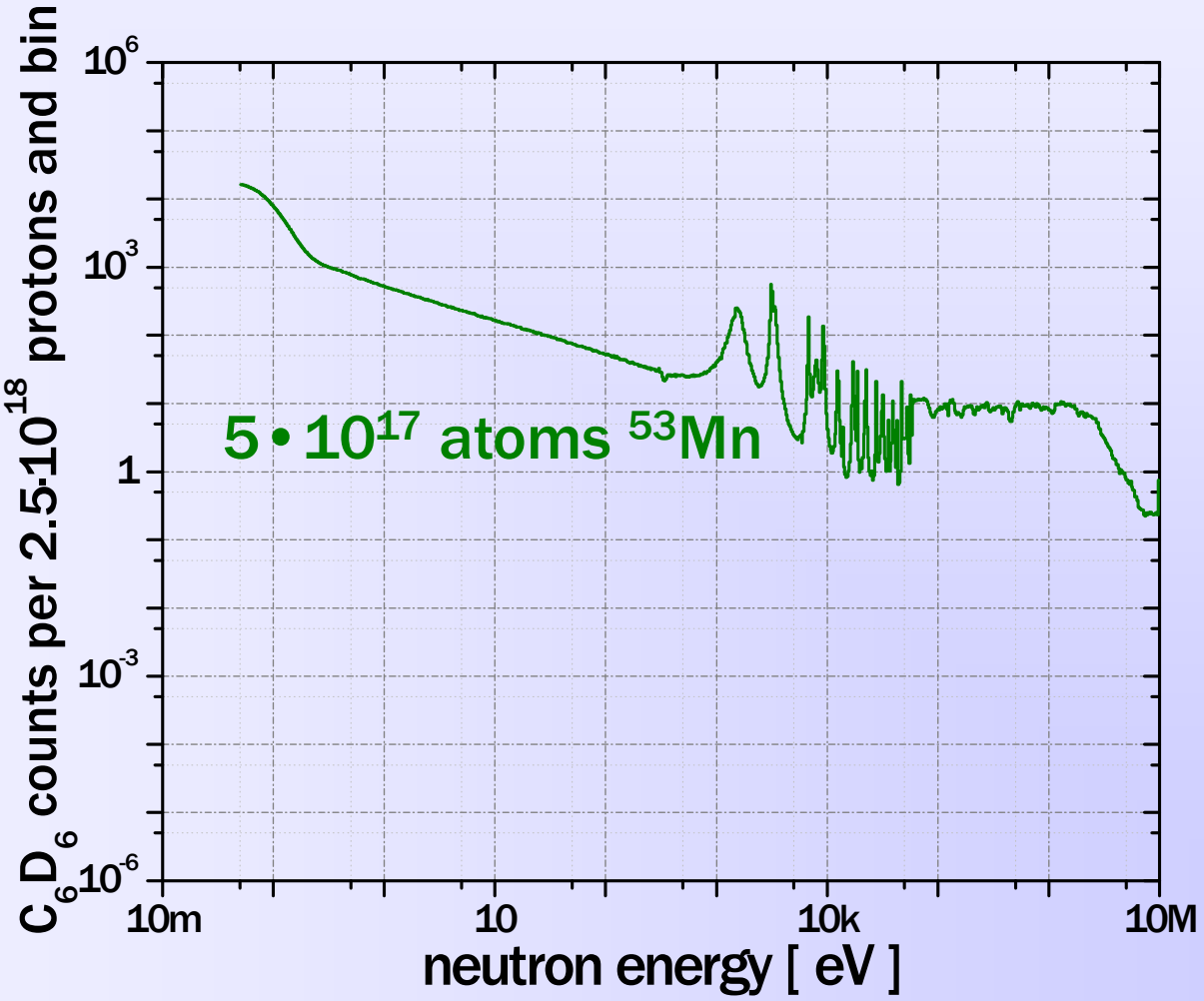

TENDL-2012 = A.J. Koning, D. Rochman (2012) Nucl. Data Sheets 113, 2841

Contribution of other elements

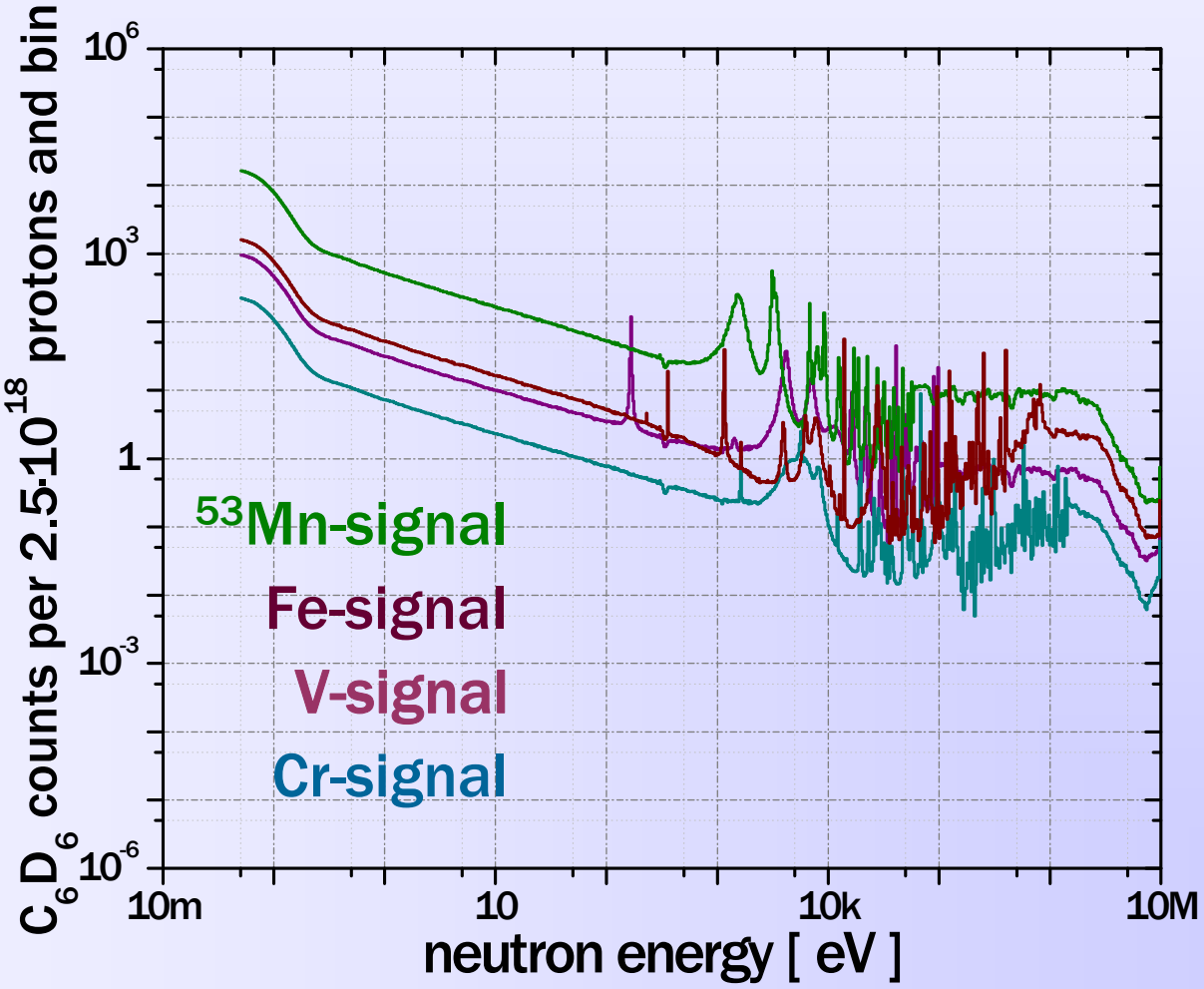

ENDF-B/VII.1 = A. Trkov & R. Capote, *et al.* (2009) Nuclear Data Sheets **110**, 3107

Contribution of backing materials

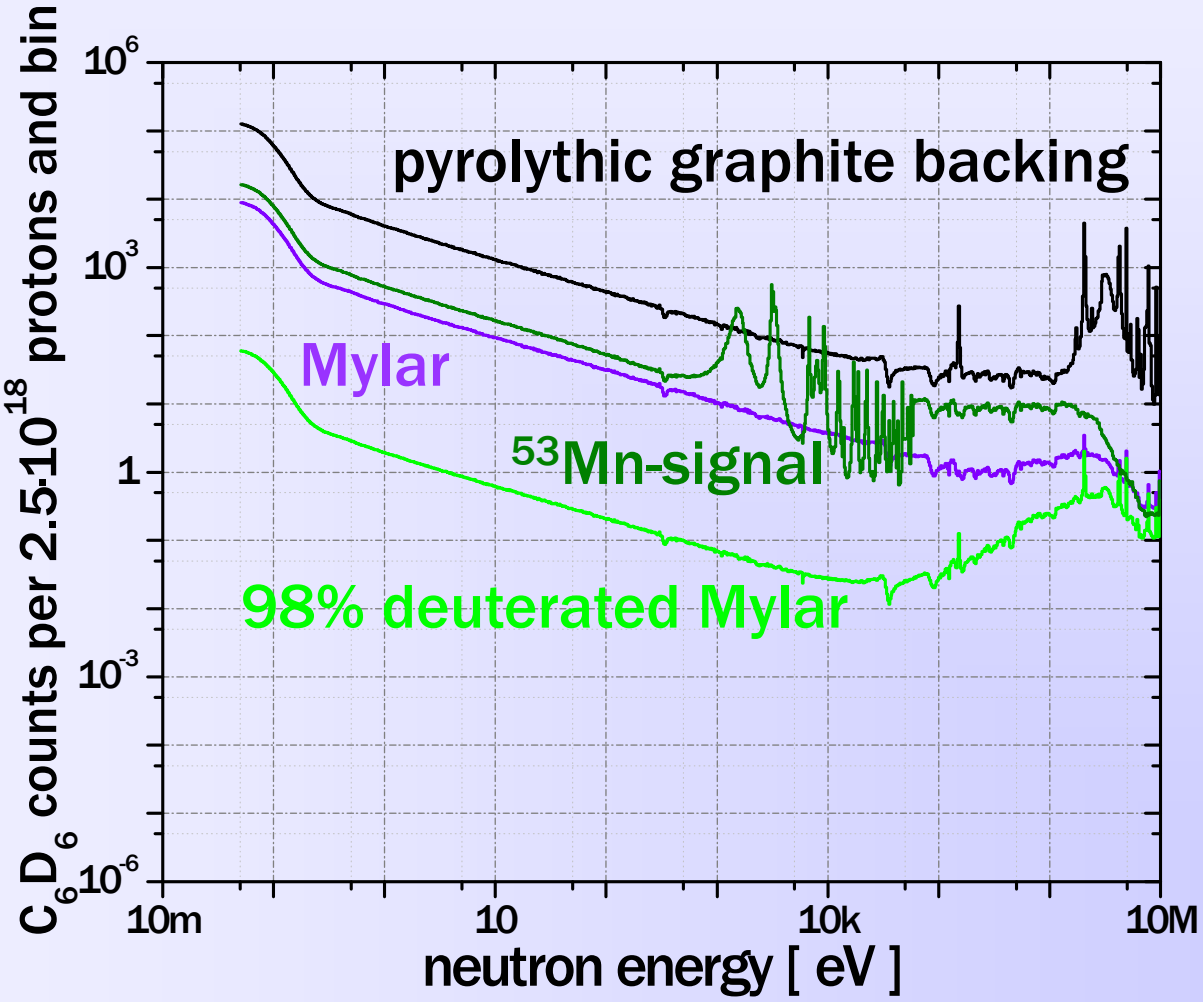

ENDF-B/VII.1 = A. Trkov & R. Capote, *et al.* (2009) Nuclear Data Sheets **110**, 3107

STIP samples

STIP sample

- diff. types of miniature specimens
- diff. structure materials used
- prepared by diff. participating labs
- placed at diff. positions in SINQ targets
- irradiated for the whole operation time
- mechanically tested after cool down period
- radioactive waste afterwards

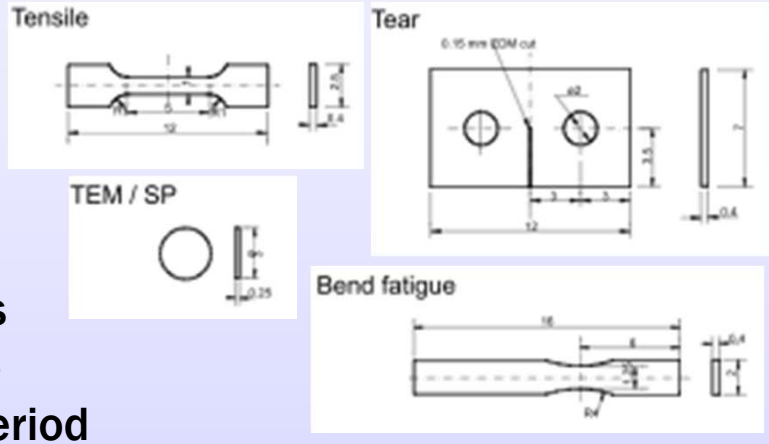

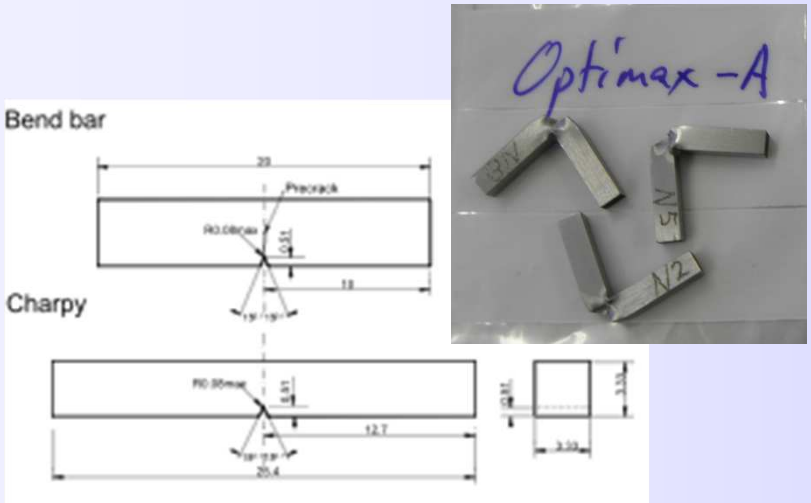

STIP analytics (May 2011)

- total used material ~ 60 g
  9.5% Cr, 1% W, 0.5% Mn, 0.25% V
- radio nuclides available

^{26}Al 300 Bq $\approx 9.8 \times 10^{15}$ atoms
^{44}Ti 135 MBq $\approx 1.1 \times 10^{18}$ atoms
^{54}Mn 70 MBq $\approx 6.7 \times 10^{12}$ atoms
^{53}Mn 173 kBq $\approx 2.9 \times 10^{19}$ atoms

R. Dressler et al.: J. Phys. G **39** (2012) 105201

Contribution of ^{55}Mn

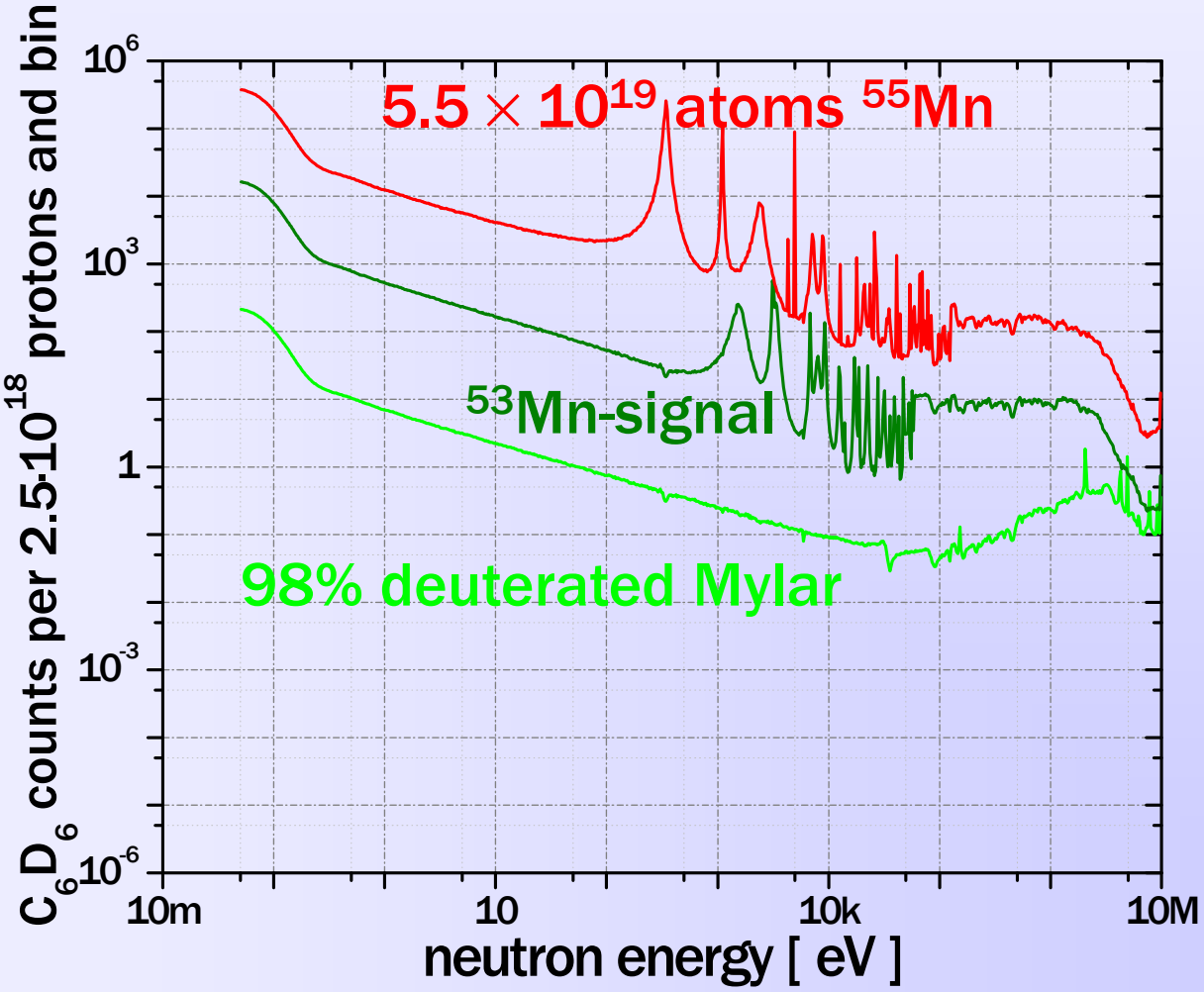

ENDF-B/VII.1 = M.B. Chadwick, et al. *Nuclear Data Sheets* **112** (2011) 2887

The ISOLDE Facility
Isotope Separator On-Line

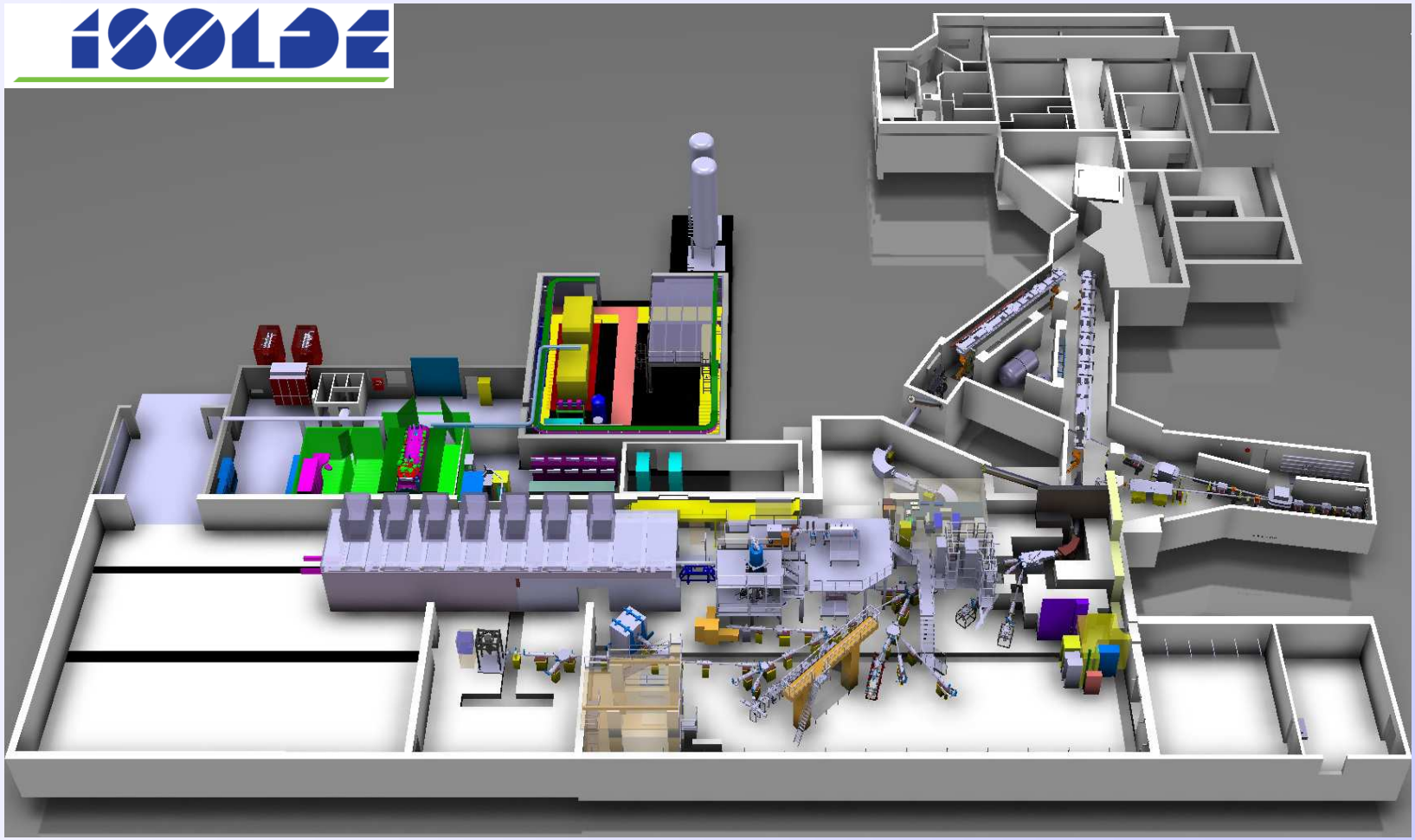

Mass separation / sample requirements

- stock solution: $2 \cdot 10^{19}$ atoms ^{53}Mn
  $3 \cdot 10^{21}$ atoms ^{55}Mn
- mass separation yield: 2.5% Mn
- mass 52/54 suppression: $> 10^3$
- mass 51/55 suppression: $> 10^4$
- current output: 100 part. µA
  (single charged) $6.2 \cdot 10^{14}$ part. per sec
- final sample: $5 \cdot 10^{17}$ atoms ^{53}Mn
  $< 10^{16}$ atoms ^{55}Mn
- separation time: 25 h

FEBIAD source

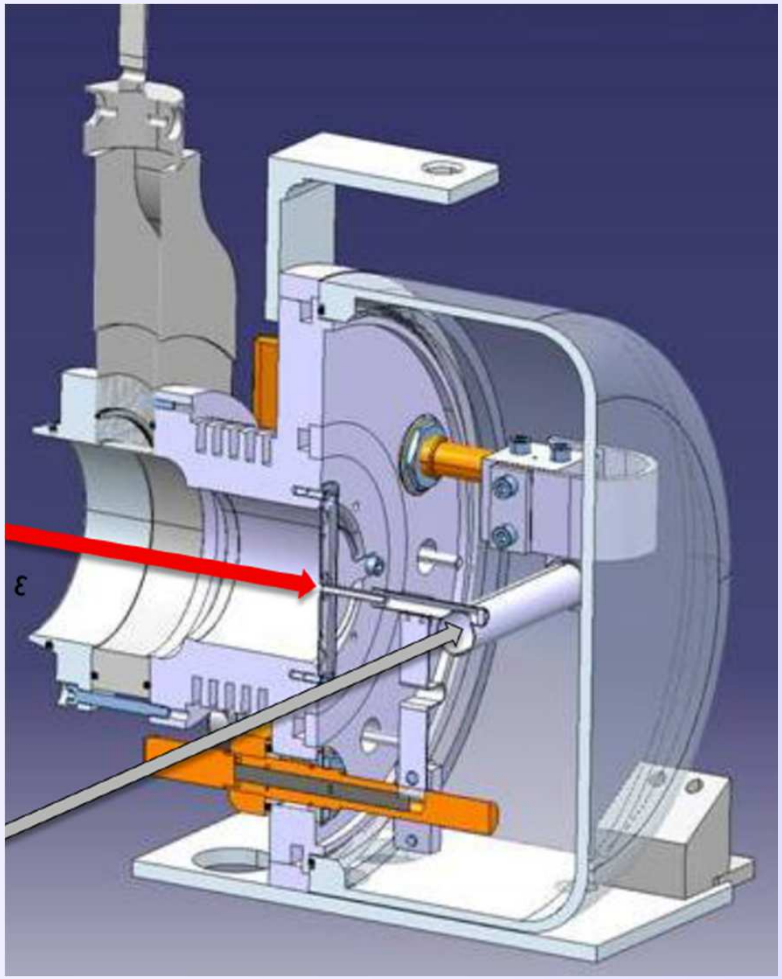

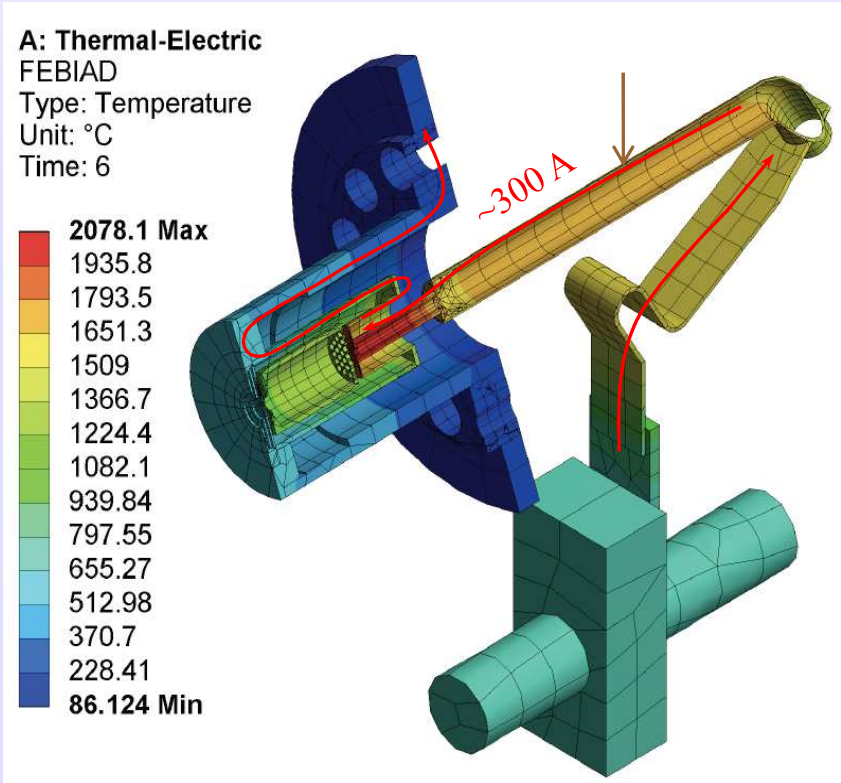

courtesy : Hyung-Joo Woo

Separation by evaporation

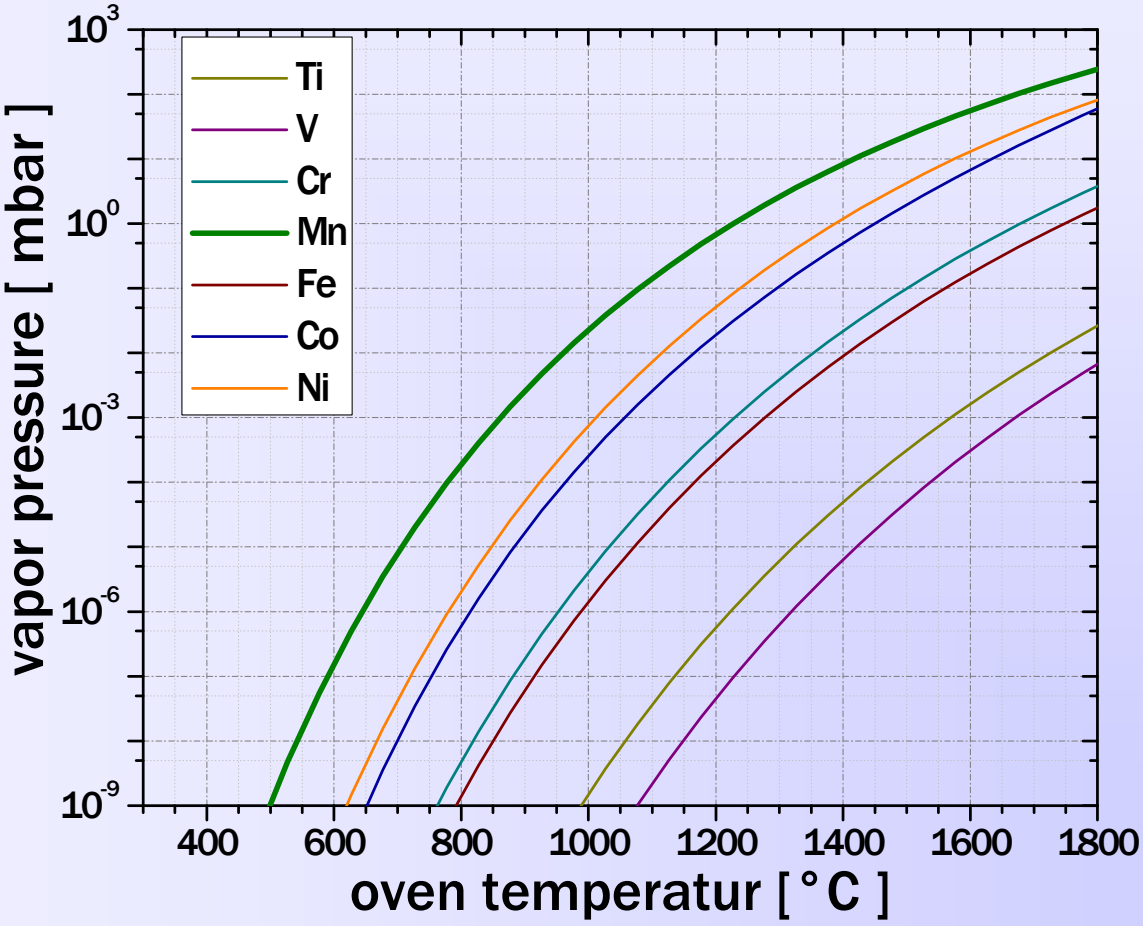

Signal of final sample

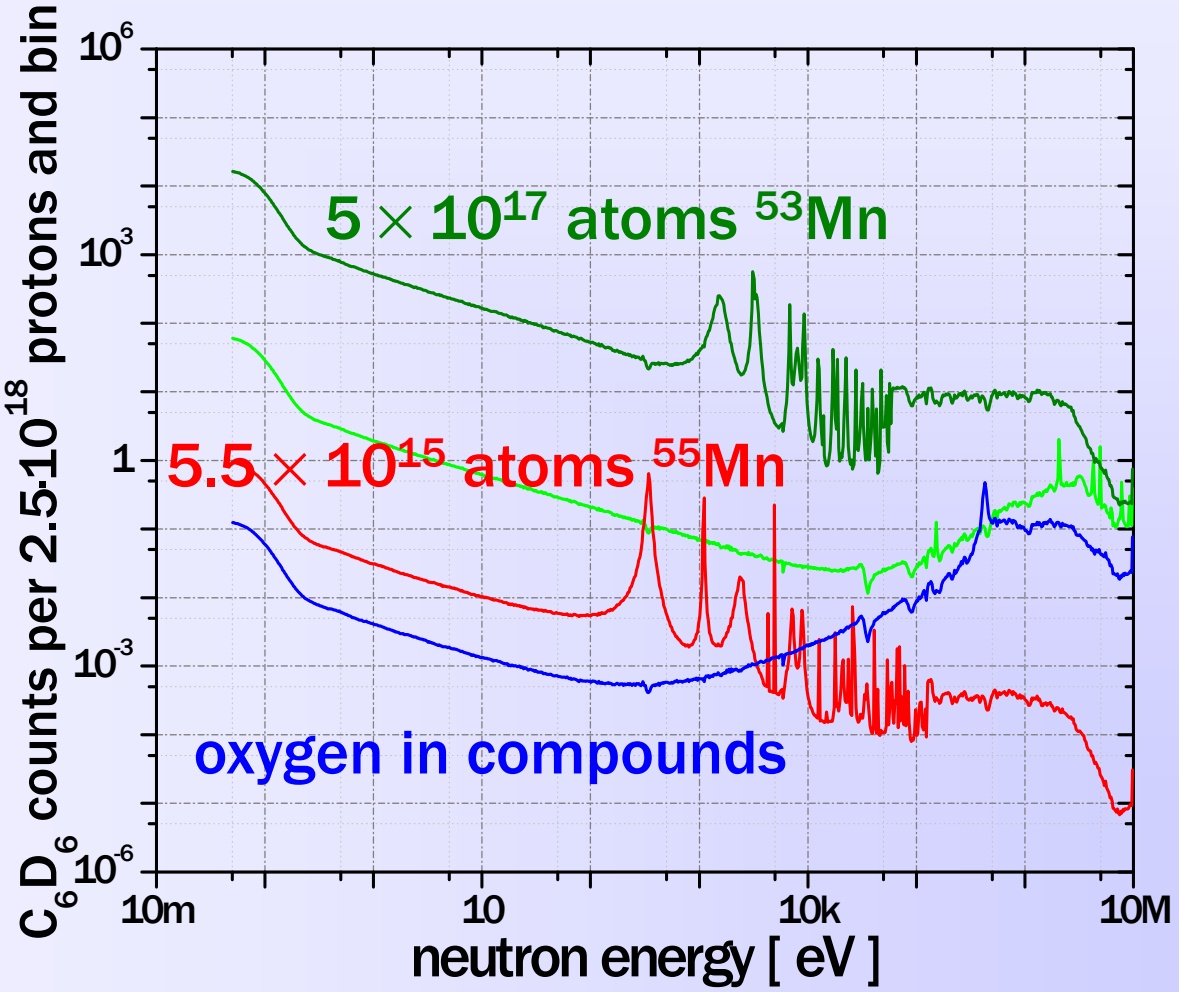

Feasibility of (n,γ) @ n_TOF-EAR2

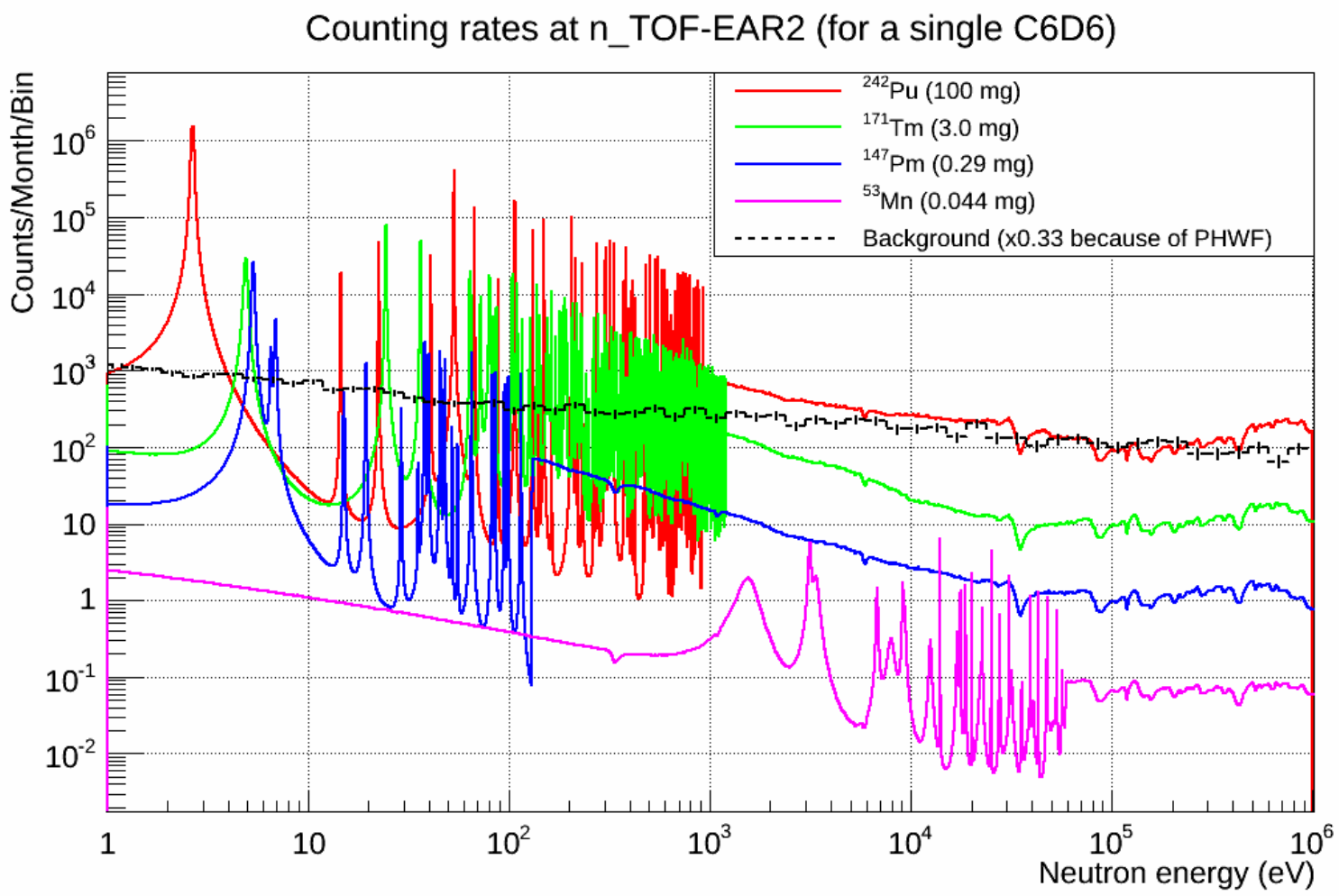

courtesy: to C. Guerrero

Status

- Target preparations
  - Chemical separation and purification done
    stock solution with $2 \cdot 10^{19}$ atoms ^{53}Mn
  - Backing material must be chosen
  - Mass-separation must be performed
- CROSS – project for PhD student at PSI
  - Determination of ^{53}Mn half-life
  - Activation measurements with thermal, cold and ultra-cold neutrons
- n_TOF - proposal
  - Mass-separation using ISOLDE
  - Measurement of capture cross section at EAR-2

Thank you for your attention