ETH zürich

Small Animal Fast Insert for MRI

Towards a high-rate capable PET insert for multimodal dynamic imaging

Robert Becker, Jean-Pierre Cachemiche, Chiara Casella, Günther Dissertori, **Jannis Fischer**, Alexander Howard, Mikiko Ito, Parisa Khateri, Kevin Kramer, Werner Lustermann, Christian Morel, Josep Oliver, Ulf Röser, Qiulin Wang, Bruno Weber

ETH Institute for Particle Physics

Contents

Introduction
Principle of PET

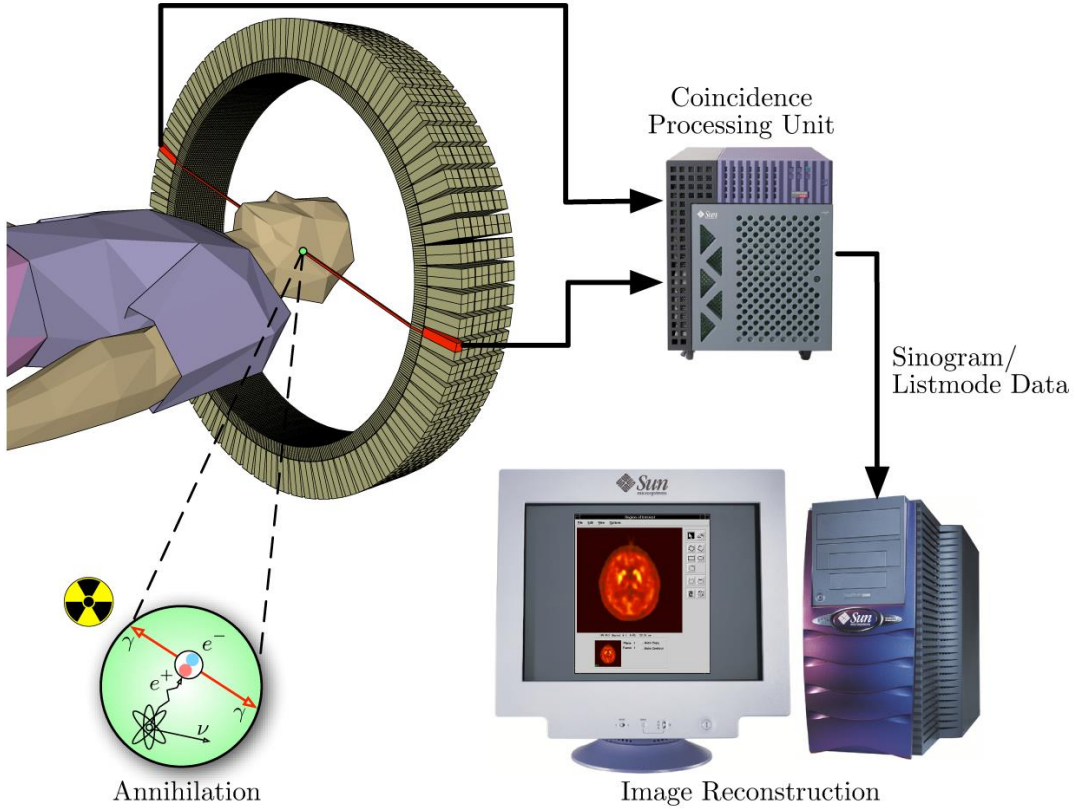

Image by Jens Maus, public domain

- PET = positron emission tomography
- Positron emitting tracer
  - e.g. F-18 ($T_{1/2} = 109.8\ \mathrm{min}$), O-15 ($T_{1/2} = 122.2\ \mathrm{s}$)
  - electron-positron annihilation
  - Detect 511 keV back-to-back gammas in coincidence
- Wanted: tracer distribution ("Image")

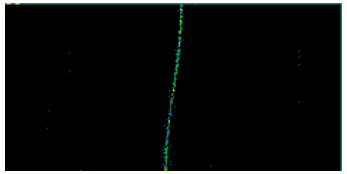

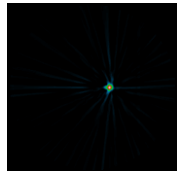

- Noisy Projections → Reconstruction → Image + Noise
- $y_i = P_{ij} \lambda_j + r_i$

SAFIR
Small Animal Fast Insert for MRI

- Simultaneous acquisition with MRI
  PET insert for preclinical Bruker BioSpin 70/30
- Detect fast biological processes
  Temporal Resolution / Acquisition times ~ seconds
  (Extremly short, usually ~ minutes)
- Increase tracer activity up to 500 MBq (~10 times more than usual) to make up for short acquisition time frames
- e.g. locate increased activity in stimulated mouse cortex ($2 \times 2 \times 2\ \mathrm{mm}^3$)
  Spatial Resolution < 1.5 mm FWHM

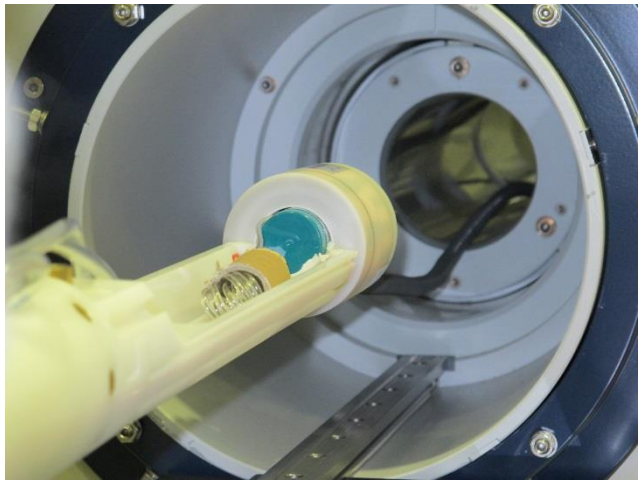

SAFIR:
Reference Design Mechanical Design Concept

Front-end electronics

Kapton cables

Crystal Matrices with SiPMs

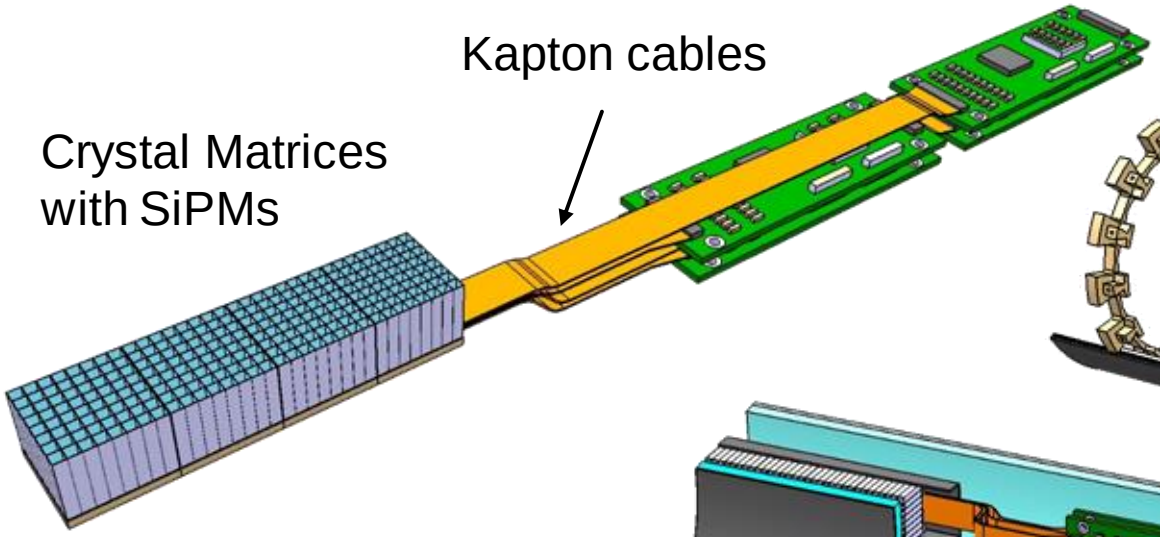

Scheme of full scanner assembly

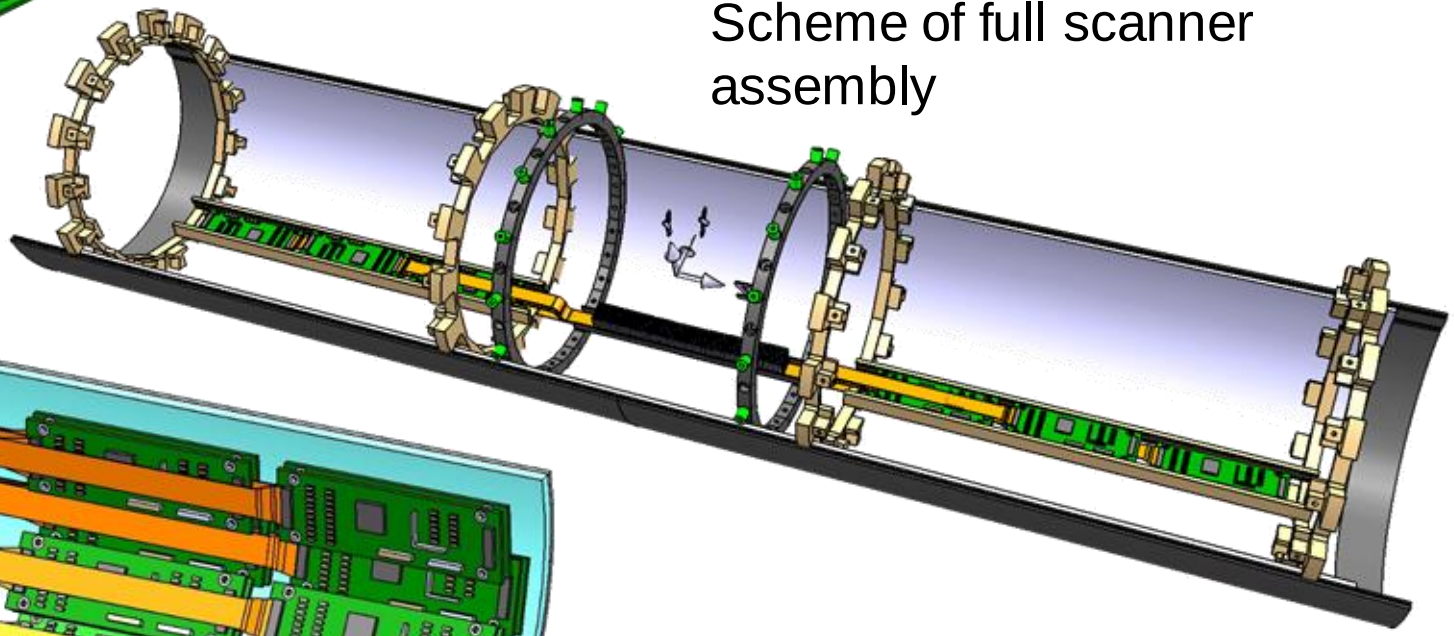

Detector modules with gradient tube and HF coils

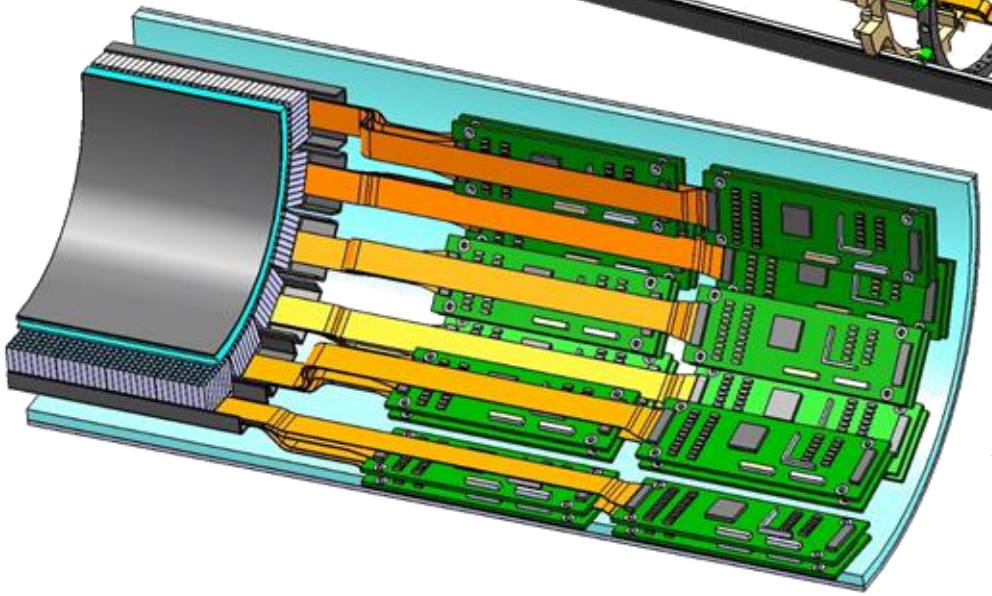

Diameters: inner 114 mm, outer 198 mm
Axially 200 mm of detector modules
10 kHz / mm^2 expected rate

SAFIR
Sensors

- LYSO crystals (e.g. SG PreLude 420)
  - Light yield: 32000 photons / MeV
  - Peak emission @ 420 nm
  - 41 ns decay time
- SiPMs (e.g. Hamamatsu “MPPC”)
  - Multiple APD cells, operated in Geiger-mode, connected in parallel
  - Peak sensitivity @ 450 nm
  - MR-compatible
- Electronics
  - Amplification
  - Shaping
  - Discrimination
  - Digitization

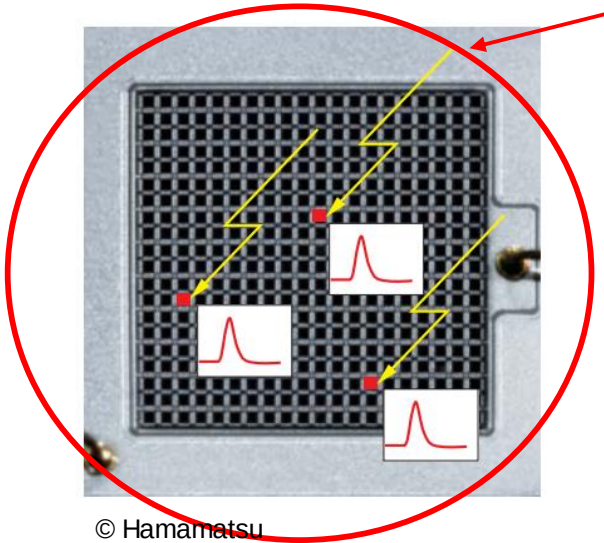

© Hamamatsu

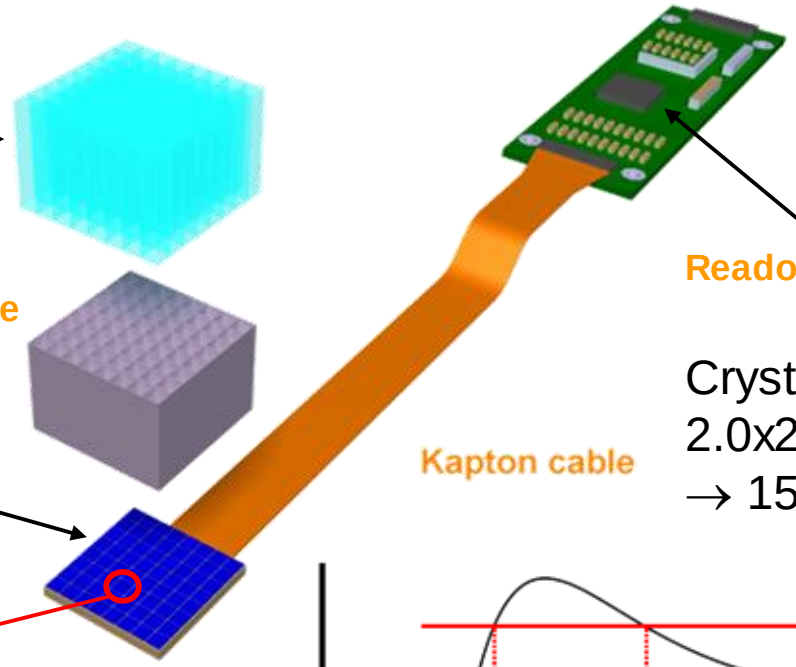

Crystal surface 2.0x2.0 mm^2
→ 15k channels

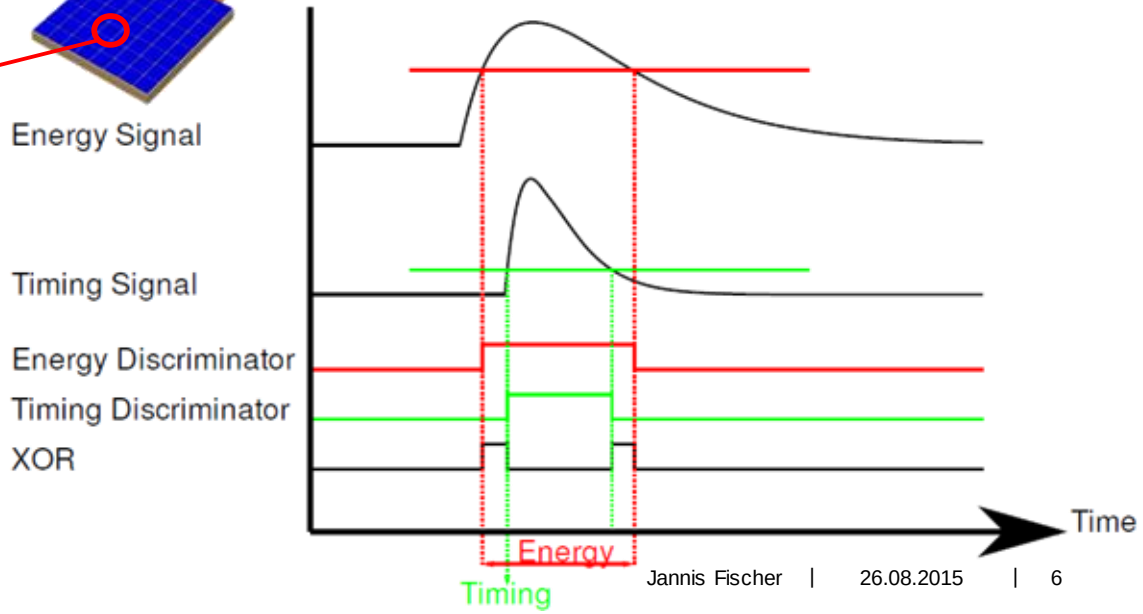

SAFIR
Alternative Readout Concept

- Reference Design
  - Kapton cable from photosensor to front-end board (FEB) outside crystal section
  - STiC ASIC (T Harion *et al* 2014 *JINST* **9** C02003) on FEB
  - Electrical or optical output to DAQ system

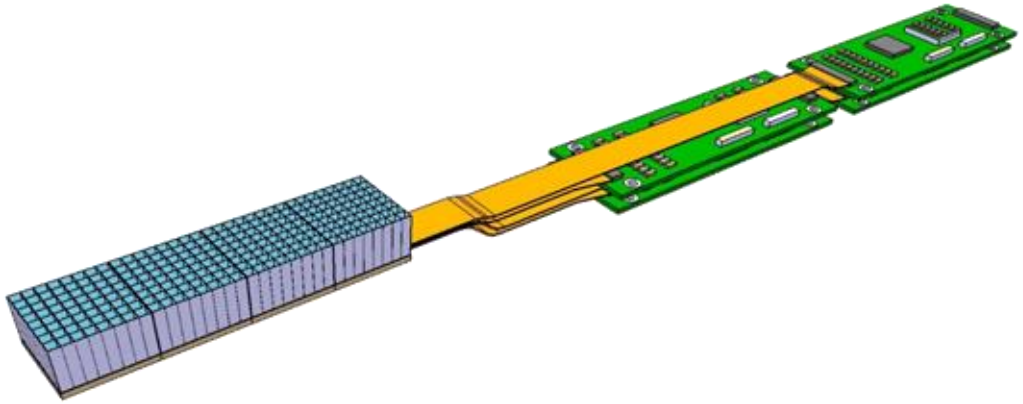

- Module Design concept
  - Ceramic Module
  - Flip-chip bonding of PETA ASIC
    (I Sacco *et al* 2015 Presentation at PISA Meeting)
  - Integrated cooling channels
  - SiPMs on other side of ceramic substrate

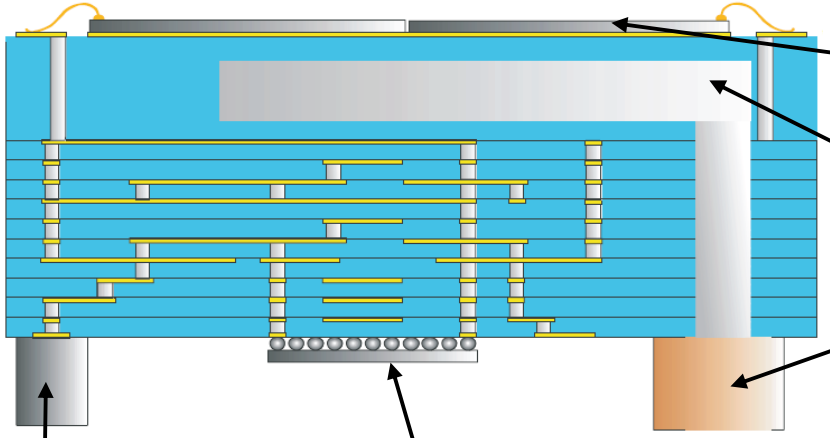

Courtesy of I. Sacco

Simulation

- Custom simulation framework based on Geant4
- Processing
  - Coincidence sorting (custom program)
  - Sinogram sorting (STIR)
- Reconstruction (STIR)
  - Analytic algorithms (filtered back-projection, FBP)
  - Iterative algorithms (e.g. OSMAPOSL)

- Evaluation of scanner geometry
  - NEMA standard
  - Noise-equivalent count-rate (NECR)
  - Spatial resolution (point source)
  - Phantom data

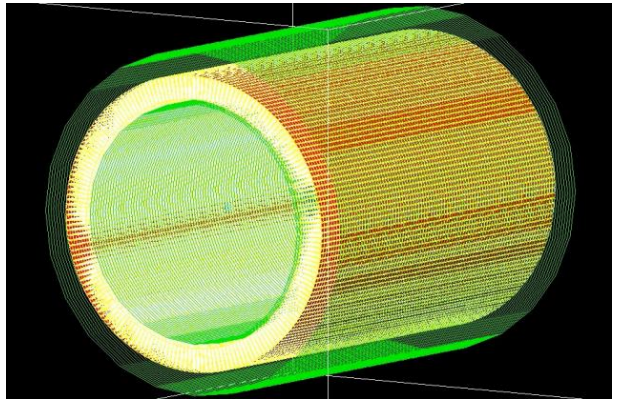

Simulation
NECR

- NEMA NECR phantom with F-18
- Gaussian blurring
  - Time σ=150 ps
  - Energy σ=0.085 E
- Scatter fraction assumed 10%
- Coincidence window 402 ps
- Crystal size:
  - $2.0 \times 2.0 \times 12\ \mathrm{mm}^3$
- Only “Golden Events”
  - Hits on photo peak (350-650 keV)
  - Multiplicity 2 in coincidence events
  - Assuming no dead-time and no pile-up

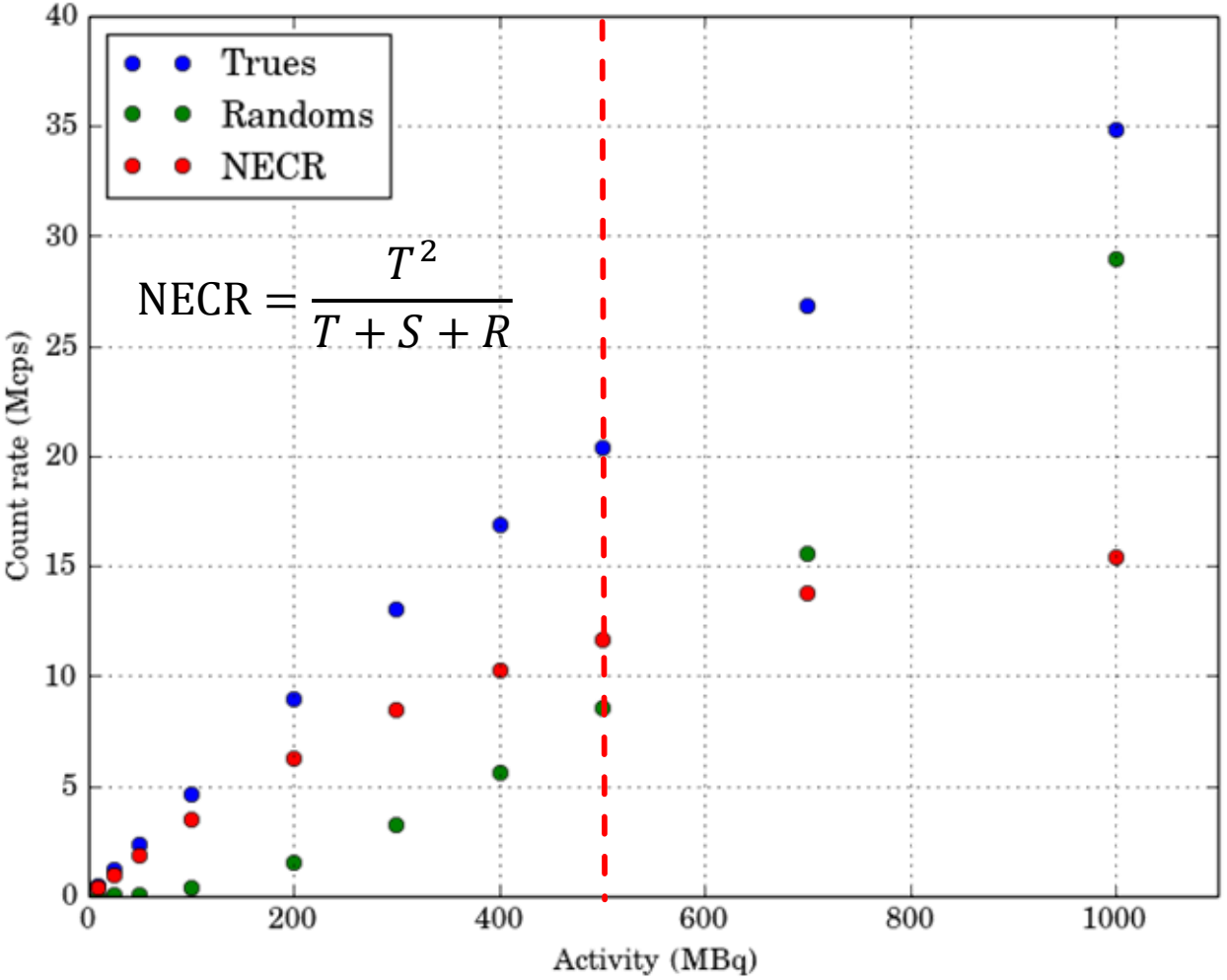

Simulation
Spatial Resolution

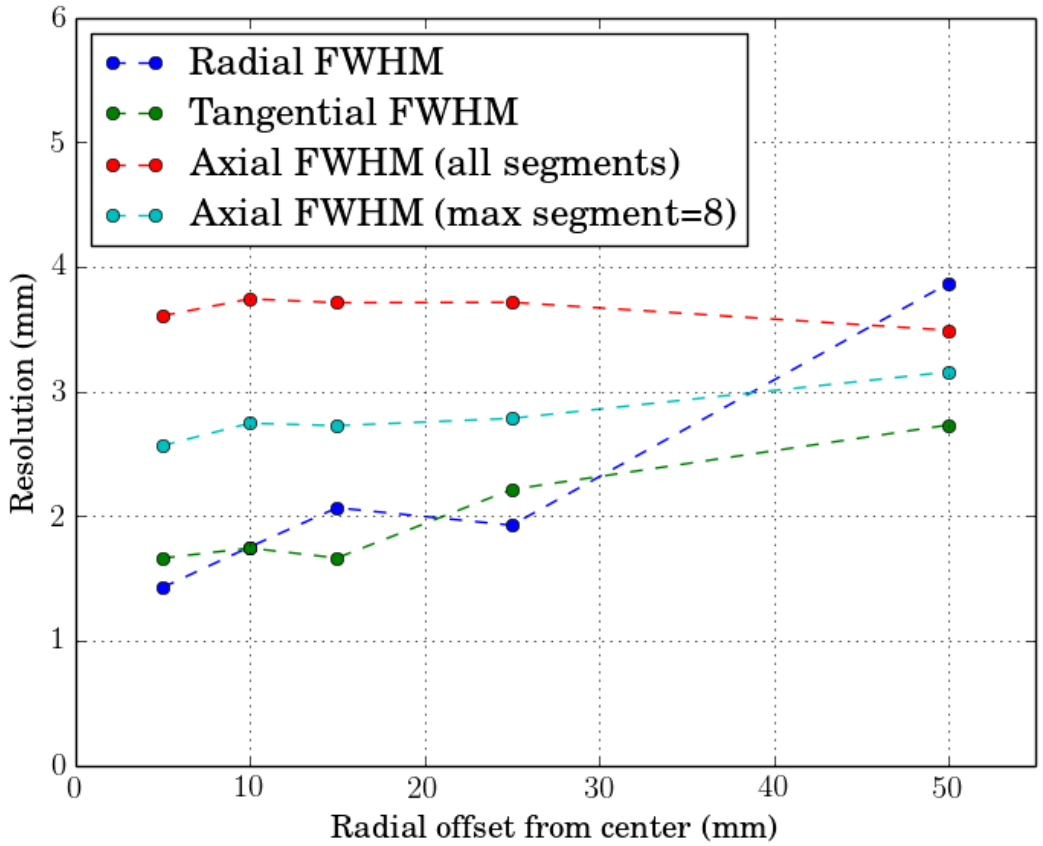

- Point-like source of Na-22 in 1 cm^3 acrylic cube at different radial distances from center
- Central axial plane
- Reconstruction (FBP3DRP)
- FWHM around maximum pixel
- **Radial and Tangential Resolution ~1.5mm FWHM achievable at center of FOV**
- **Axial Resolution dependent on ring difference**

Simulation Derenzo

- Crystal size: $2 \times 2 \times 12\ \mathrm{mm}^3$
- 500M events in balls

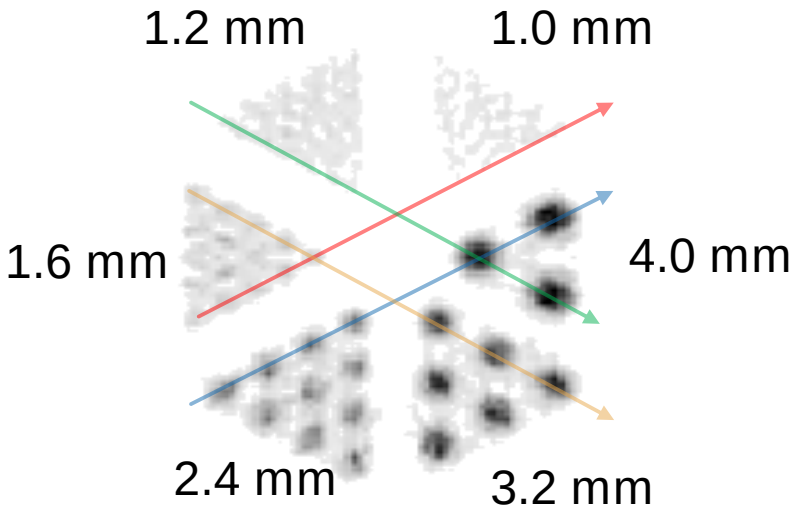

- Voxel size = bin size / 2 = 0.55 mm
- Distinguishable down to **1.6 mm** spheres

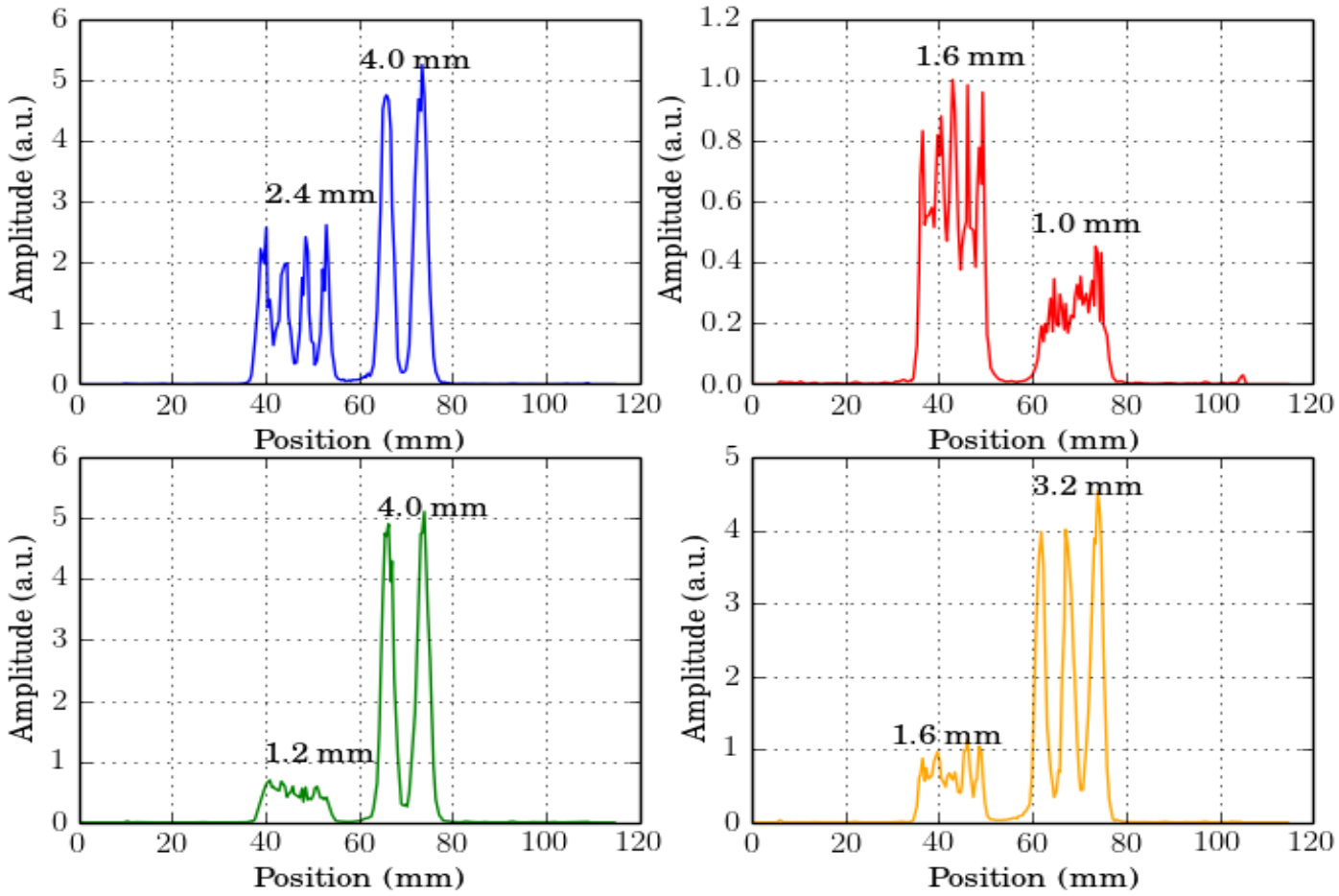

Summary and Outlook

- Simulation
  - NECR: no domination by randoms at prospective activity (500 MBq)
  - NEMA spatial resolution requirements are met
  - Iterative reconstruction resolves objects smaller than crystal side length
- Electronics Concept
  - Two alternative concepts
  - To be tested for rate capability, MR compatibility, timing resolution
- Aim to have one prototype ring end 2016
- Full system to be finished 2017