TC status & plan

April 5, 2018

Yusuke Uchiyama

TC condition in RUN2017

- Bad channels
  - TC origin (SiPM or backplane): 1 channel showed current overflow
  - WD connectors: several channels on 4 boards.
    Noisy, unstable → apply temporary grounding. One connector completely detached.
- No laser signal
  - 11 counters (2 in US, 9 in DS).
- Temperature controlled at 20℃ by chiller system
  - Use chiller devices used for MEG TC.
- Operation voltage determined by bias scan of laser run.
  - Best time-resolution point on average (not optimized counter-by-counter) → +1 V.
  - Reduce voltages on high current channels.

Maintenance

Items to be done

1. Investigate and repair the broken fibers (9 counters in DS, 2 in US)
2. Investigate and replace bad counters (1 dead ch, 1 high current)
3. Fix broken laser tube
4. Replace broken cables
5. Fix problematic thermometers
6. Check SiPM detachment for picked up samples

Maintenance

Mitsutaka& Yusuke

Items to be done

1. Investigate and repair the broken fibers (9 counters in DS, 2 in US)
   - ✓ Done for US. 2 of DS ones fixed by reconnection, 7 were picked up.
2. Investigate and replace bad counters (1 dead ch, 1 high current)
   - ✓ The two counters (DS) were picked up.
3. Fix broken laser tube
   - ✓ Done
4. Replace broken cables
   - ✓ Done. 3 spare cables at each side were additionally installed.
5. Fix problematic thermometers
   - ✓ Ongoing. Spare sensors are under preparation in Genoa.
6. Check SiPM detachment for picked up samples
   - ✓ Done. 4 picked-up counters were checked and found **no detachment**.

US is ready in perfect condition. We'll resume maintenance of DS in April.

Chiller upgrade

Matteo

- One of the chillers was broken.
  - Just after the run finished, coincident with a power cut.

- New powerful chillers bought by GE group
  - 400 W → 1 kW
  - one for each sector
  - larger dimensions → place in the area to be discussed.
  - one of them has been delivered to PSI.

- Flow control using valves
  - Under test in Genoa.
  - Control system/algorithm to be implemented.
    - SCS3000 or standalone?

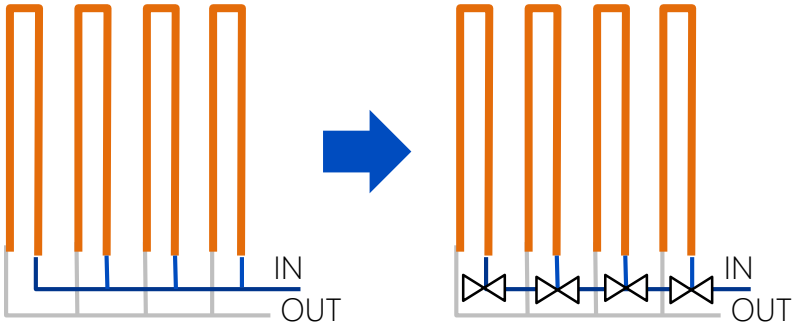

Cooled dry air

Masashi

- We aim at 10℃ operation
  - to reduce the SiPM performance degradation due to radiation damage.
  - Humidity control is required to avoid water condensation.

- Flushing dry air turned out an effective solution.
- But, controlling the temperature is necessary
  - for stability & uniformity of temperature of the TC volume.

- Basic idea will be discussed in this meeting.
  - Need test and engineering this year.

Laser system upgrade

Mitsutaka

- Optical switch was finally delivered.
  - Change manufacturer from Piezo → LEONI.
  - 1×12 for 8 output fibers.
  - Control via SCS3000 (implemented).

- Controllable optical attenuator
  - to control laser power.
  - Bought.
  - To be tested at PSI.

Massimo

- Replace SYNC cable with temperature-insensitive one.

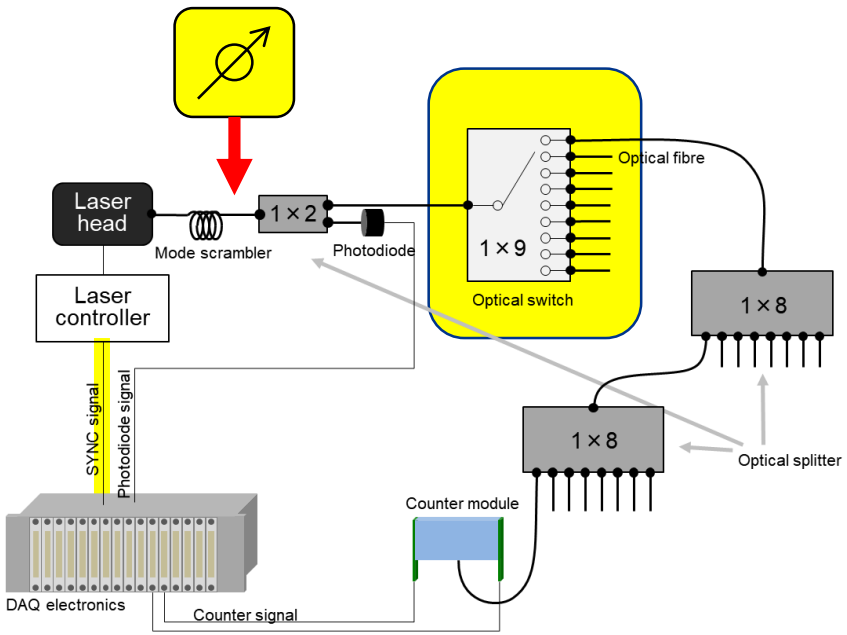

We can control everything remotely this year.

Survey

Mitsutaka

- Perform 3D scan of DS
  - Analysis of US data ongoing.
  - Move DS TC outside piE5.

- Modify the reference points on DS for laser tracker.
  - Original points were hard to see with the end-cap.
  - To be discussed with survey group.

Production of spare counters

- Now we have scant spare counters.
- Additional 198 SiPMs were bought by PV group (recently, +40 for spare of spare).
  - Different (new) type from existing counters' one
  - Different electrical characteristics:
    - Breakdown voltage larger by 2 V
    - Wider operational range

  ⇒ Different operational voltage (+18 V), cannot be used mixed with others in a WDB.
- Have to replace 8 counters as a set.

Paolo

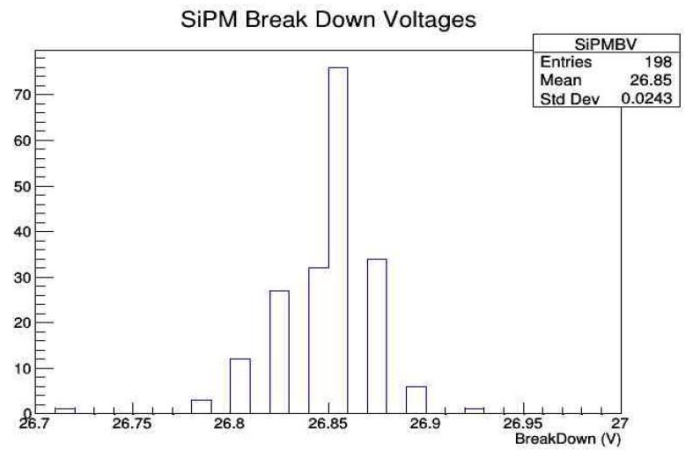

- Plan:
  - Make 8 40-mm counters & 8 50-mm counters this summer.
  - Install them in the next shutdown at important/high-hit-rate location.
  - → Picked up 8+8 counters will be used as spares of existing counters.

Analysis

- Analysis of RUN2017 data in progress.

- Performance was already presented in Jan.
- Background study.
  - Hit distribution, hit rate
  - comparison with MC
  - Study impact of beam displacement

Miki

- Calibration
  - Further study both for laser & Michel.
  - Application to the data, used in official reprocesses.

Mitsutaka

- Radiation damage effects
  - Damage unbalance.

Masashi

Data-taking this year

Before installation

- Laser
  - want to test the new components before installation.
  - need at least two crates.

May–Jul

After installation, after WDBs for LXe gets ready?

- C–W boron ?
  - worth trying with full acceptance of LXe.

Oct

- Dalitz in CEX ??
  - not clear how much useful w/o CDCH.
  - Neutron irradiation to be cared. (shorter beam time is better)

Nov?

- Mott ???
  - Last years experience shows Mott positron DAQ is difficult with MEG II setup.
    - Much higher BG rate. Due to material at downstream? Understandable?
    - Without detailed study (MC of Mott beam?), reluctant to do it again.
    - US is better?

- WD **crates assignment**
  - to be considered including CDCH test.
  - Location of crates is an issue.
    - TC requires crates in central racks at bottom position.
    - CDCH? Cable length limitation?
- **DAQ rate** is also an important factor
  - with DCB and new MEGON
  - but also with much increased number of channels.

- Muon beam run
  - want to occupy 4 crates continuously
  - to avoid inefficient and dangerous re-cabling works as last year.

Dec

Conclusion

- TC will be final & perfect condition this year
  - US maintenance completed, DS soon.
  - Several upgrades planned.
- Waiting for the engineering run & physics run
  - Anticipating data taking with CDCH this year.

Extraction from COBRA

thanks to Manuel

- Both TCs were extracted from COBRA on 6th Feb. (on schedule)
  - We broke 3 signal cables during the work.
  - We checked all channels for current and laser signal and found no additional bad channels
- After the extraction,
  - TCs will stay in piE5 area for the maintenance work till next installation.
  - We won't unplug signal cables from TC nor optical fibers from the splitter boxes.