Science & Technology Facilities Council

Vertical Fixed Field Alternating Gradient Accelerators

J.-B. Lagrange, D. Kelliher, S. Machida,
C. Prior, I. Rodriguez, C. Rogers
ISIS department, RAL, STFC, UK

Vertical excursion FFA

Vertical excursion FFA considered in 1955 as an "Electron Cyclotron", rediscovered recently.

Advantages:

- Quasi-isochronicity for relativistic particles,
- Infinite transition energy,
- Orbit radius independent of momentum, like synchrotrons,
- Geometrical arrangement of the lattice footprint independent of the scaling condition, unlike in horizontal scaling FFA,
- Rectangular shape for the main magnets and the coil geometry is simpler compared to the spiral magnet of horizontal FFA.

Outline

- Magnetic field model
- Lattice design, optics
- Magnets
- Diagnostics
- Summary

Vertical excursion FFA

To keep the transverse linearised equations of motion independent of momentum, the field must follow

$$B = B_0 e^{m(v-v_0)}$$

with $m = \frac{1}{B}\frac{dB}{dv}$ the vertical normalised field gradient.

⚠️ since m is a vertical gradient, there is coupling between horizontal and vertical plane.

Rectangular Field model

- In the mid-plane ($h = h_0$): Cartesian coordinates (h,v,l)

$$\boxed{B_v(h_0, v, l) = B_0 e^{m(v-v_0)} \mathcal{F}(l)}$$

with m the constant normalised field gradient, and $\mathcal{F}$ the arbitrary fringe field function (*tanh* here).

- From $\left(\overrightarrow{curl}\,\overrightarrow{B}\right)_h = 0$

$$B_l(h_0, v, l) = \int_v \frac{\partial B_v}{\partial l} dv = B_0 \mathcal{F}'(l) \left(\frac{e^{m(v-v_0)}}{m} + g(l) \right)$$

with $g(l)$ an arbitrary function independent of v, must be 0 to keep the invariance of the closed orbits with momentum.

$$\boxed{B_l(h_0, v, l) = \frac{B_0}{m} e^{m(v-v_0)} \mathcal{F}'(l)}$$

- Because of the field symmetry, $\boxed{B_h(h_0, v, l) = 0}$

Rectangular Field model (2)

Cartesian coordinates (h,v,l)

In the mid-plane ($h = h_0$)

$$\begin{cases} B_{h0}(h_0, v, l) = 0 \\ B_{v0}(h_0, v, l) = B_0 e^{m(v-v_0)} \mathcal{F}(l) \\ B_{l0}(h_0, v, l) = \dfrac{B_0}{m} e^{m(v-v_0)} \mathcal{F}'(l) \end{cases}$$

with m the constant normalised field gradient, $\mathcal{F}$ the fringe field function (*tanh* in the models)

Off mid-plane extrapolation components from Maxwell equations:

$$\begin{cases} B_h(h, v, l) = \dfrac{B_0}{m} e^{m(v-v_0)} \sum_i B_{hi}(l)(h - h_0)^i \\ B_v(h, v, l) = B_0 e^{m(v-v_0)} \sum_i B_{vi}(l)(h - h_0)^i \\ B_l(h, v, l) = \dfrac{B_0}{m} e^{m(v-v_0)} \sum_i B_{li}(l)(h - h_0)^i \end{cases}$$

Outline

- Magnetic field model
- Lattice design, optics
- Magnets
- Diagnostics
- Summary

VFFA lattice parameters

3 key parameters in the case of rectangular magnets:

- Normalised field gradient m,
- F/D strength ratio,
- Magnet position in the radial direction y_s.

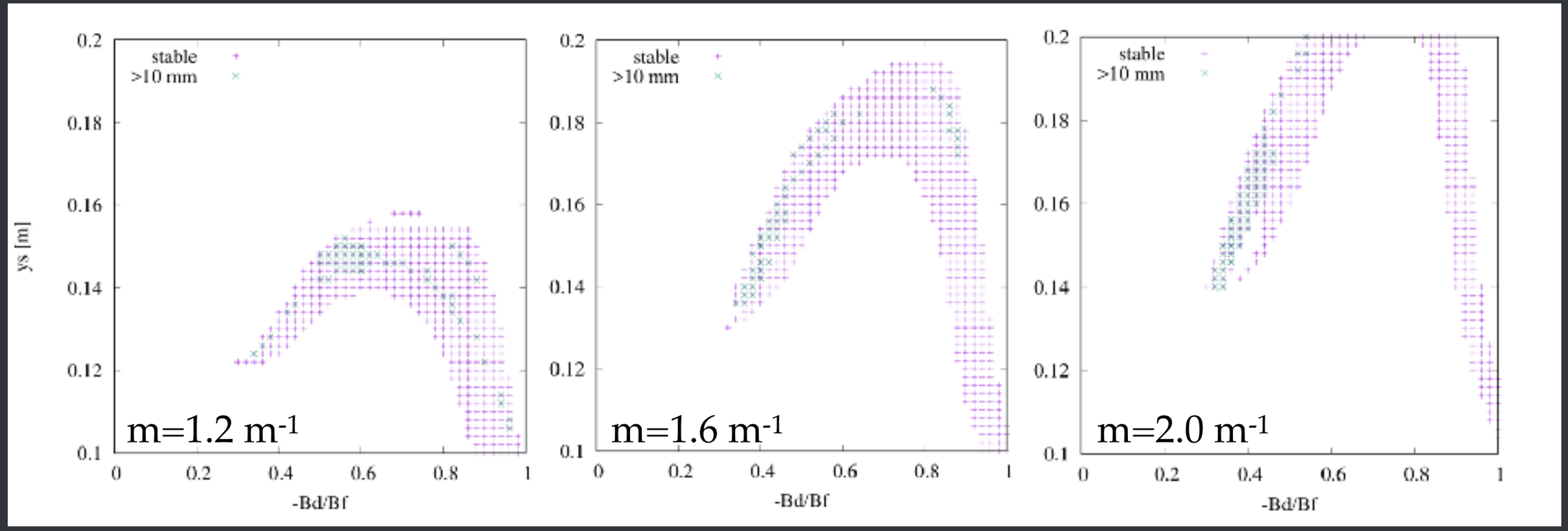

Cell tune diagram

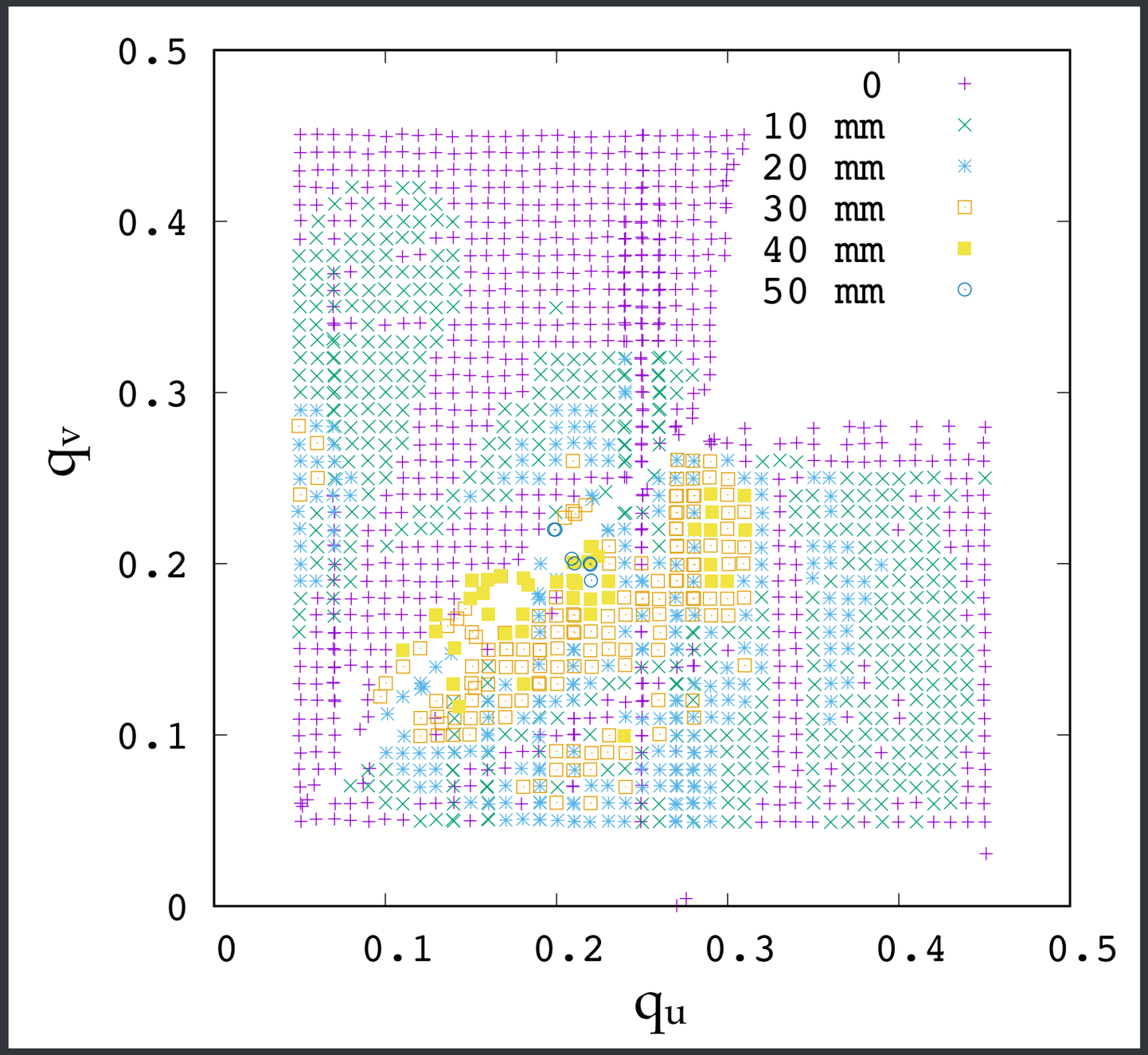

Dynamic aperture (250 turns)

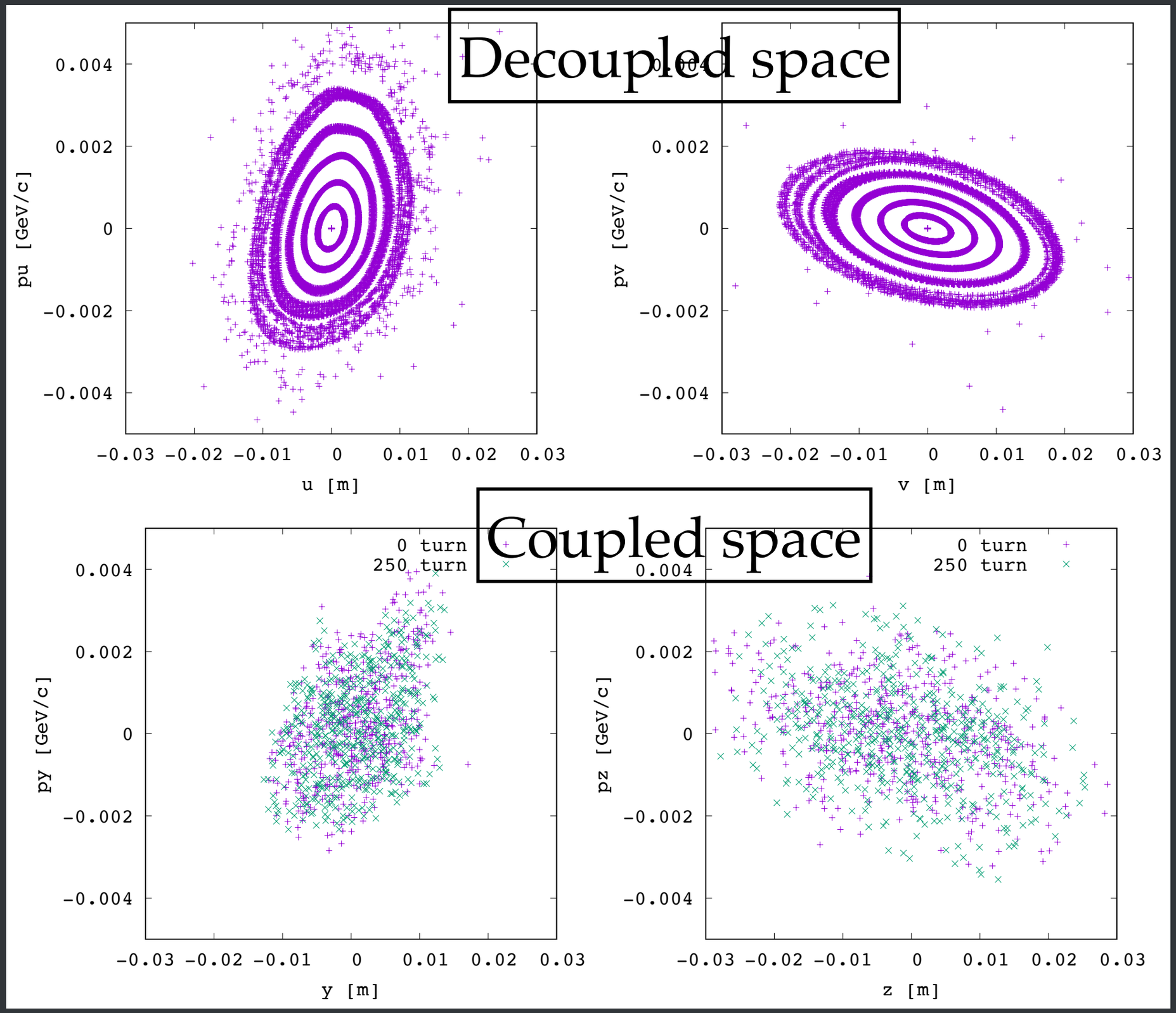

Example: ISIS-II lattice

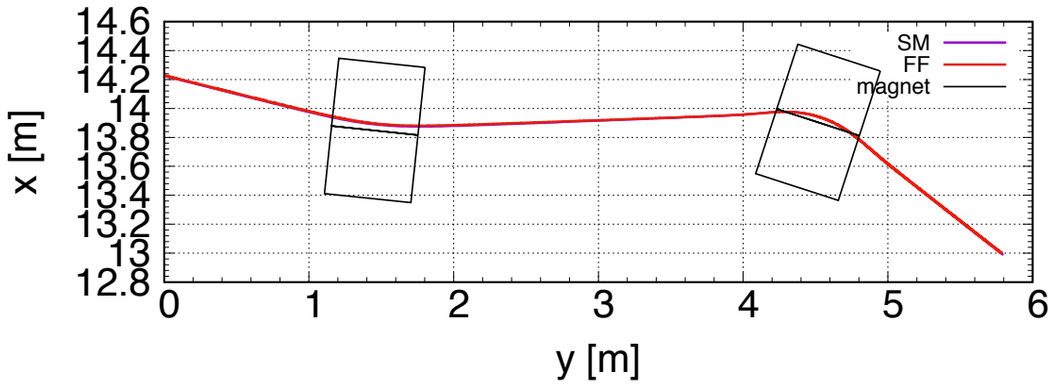

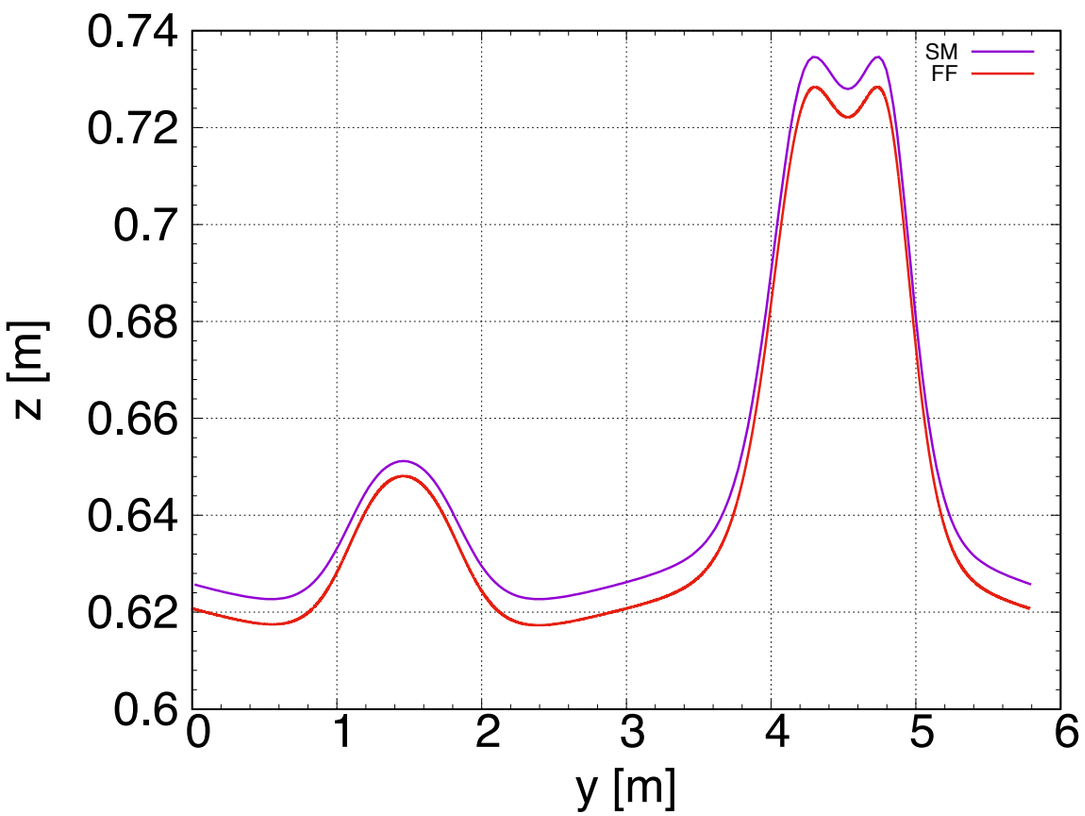

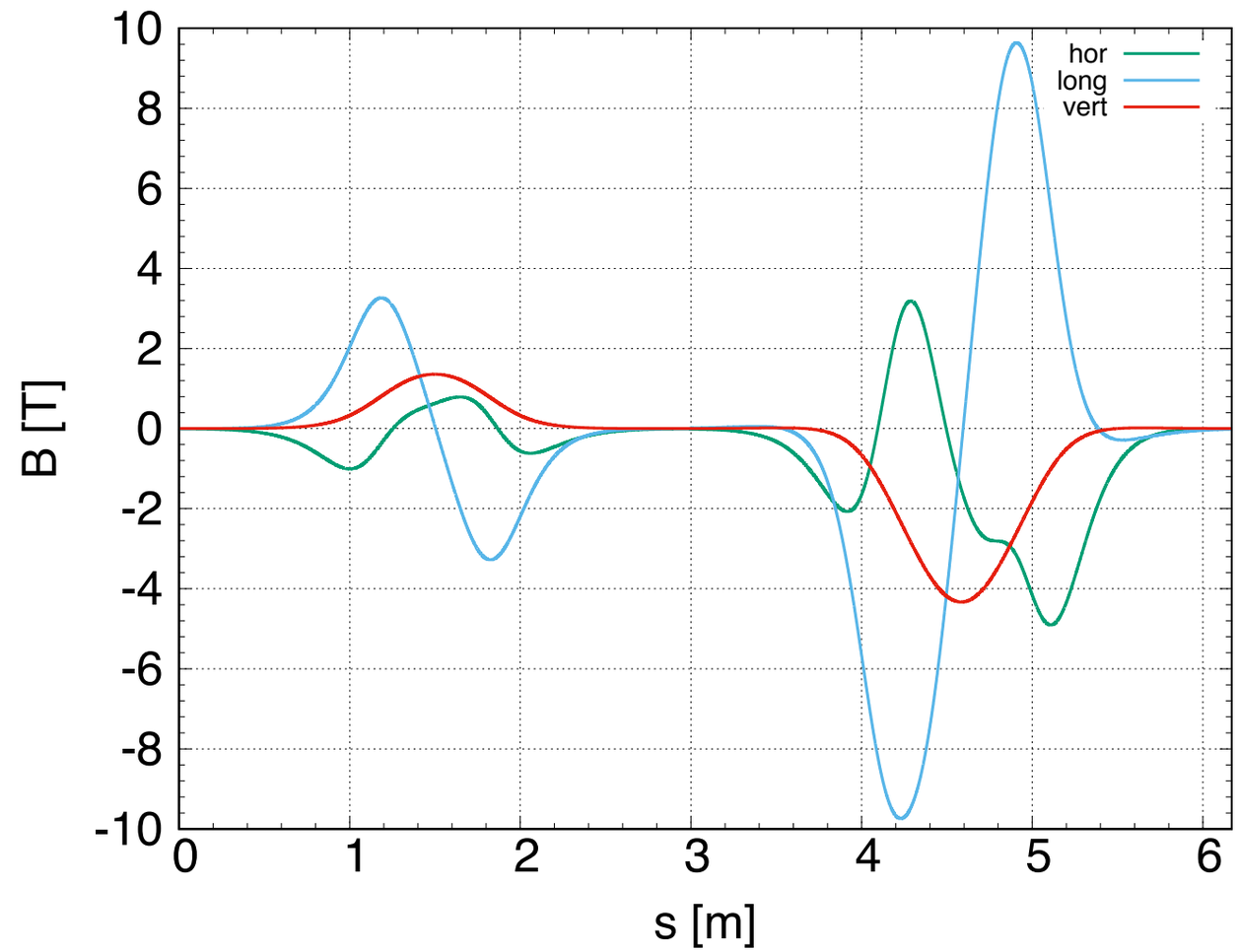

Transfer matrix

0.126724	-1.062632	-0.334981	-2.438170
-0.033171	0.530890	0.238975	-1.234017
1.519560	-2.273832	-0.121190	3.426950
0.128869	0.440615	-0.019195	0.470645

Fixfield

$\nu_u = 0.230497$, $\nu_v = 0.189549$

1.338805E-01	-1.072916E+00	-3.205958E-01	-2.514264E+00
-2.316729E-02	5.763635E-01	2.505197E-01	-1.170121E+00
1.477503E+00	-2.430009E+00	-1.460046E-01	3.529293E+00
1.219268E-01	4.366159E-01	-1.945572E-02	4.664045E-01

Scode

$\nu_u = 0.231858$, $\nu_v = 0.184701$

Tunes

- $\nu_u = 0.230497$, $\nu_v = 0.189549$

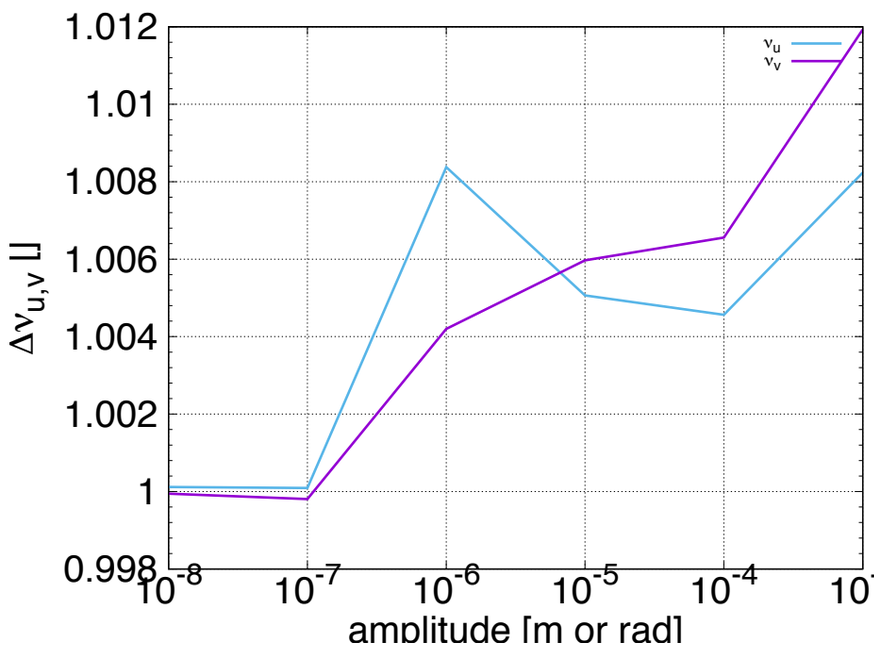

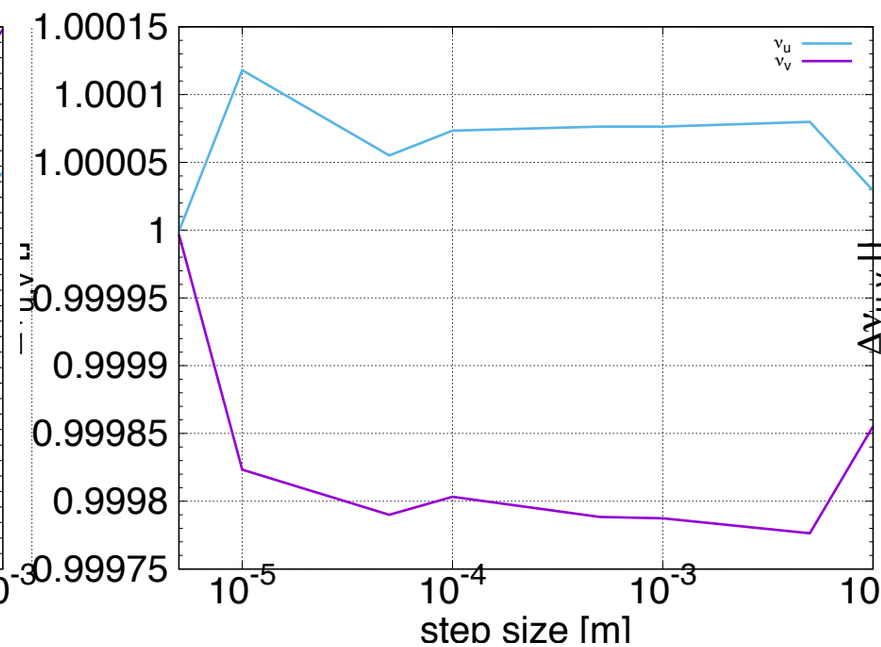

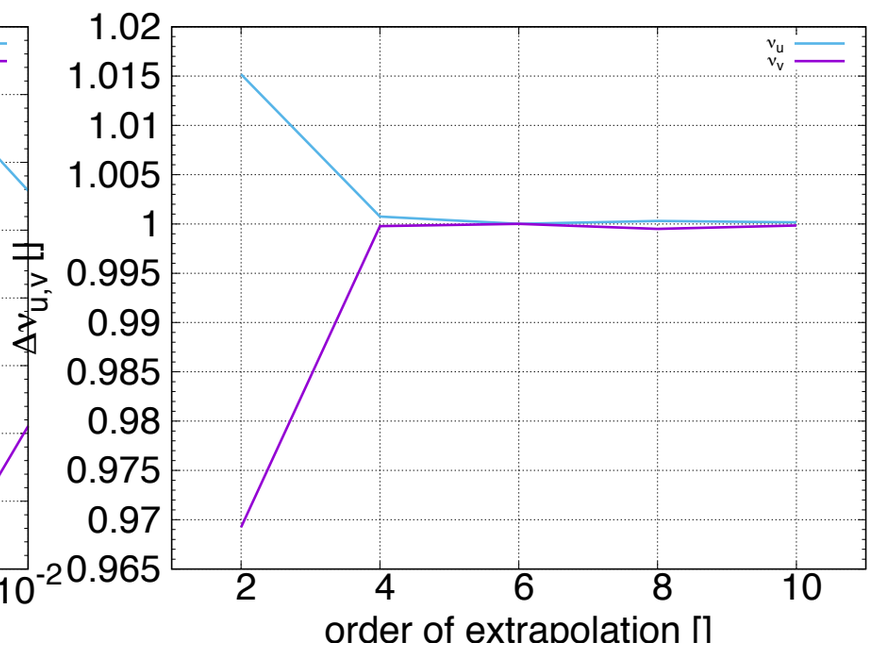

Decoupled beta

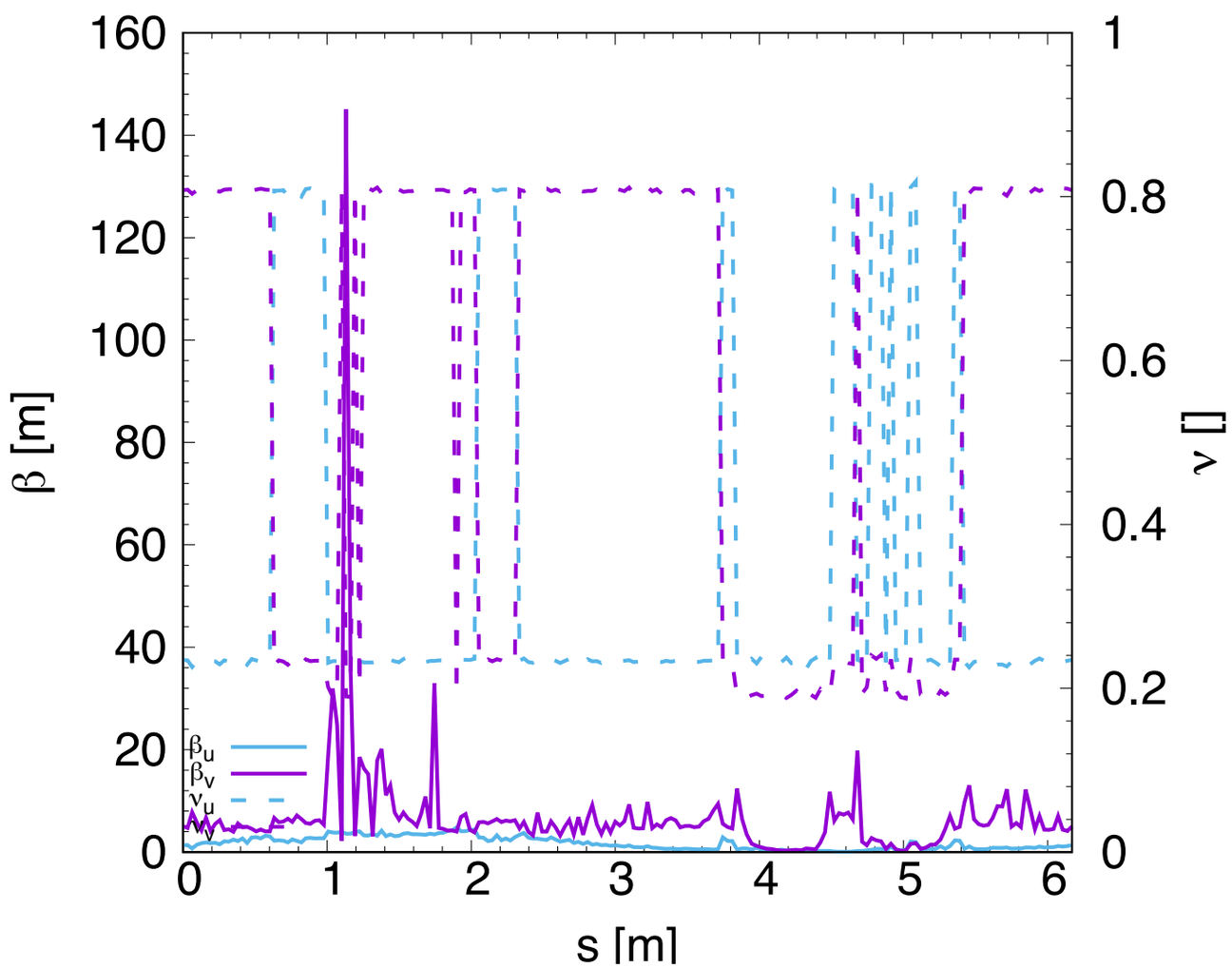

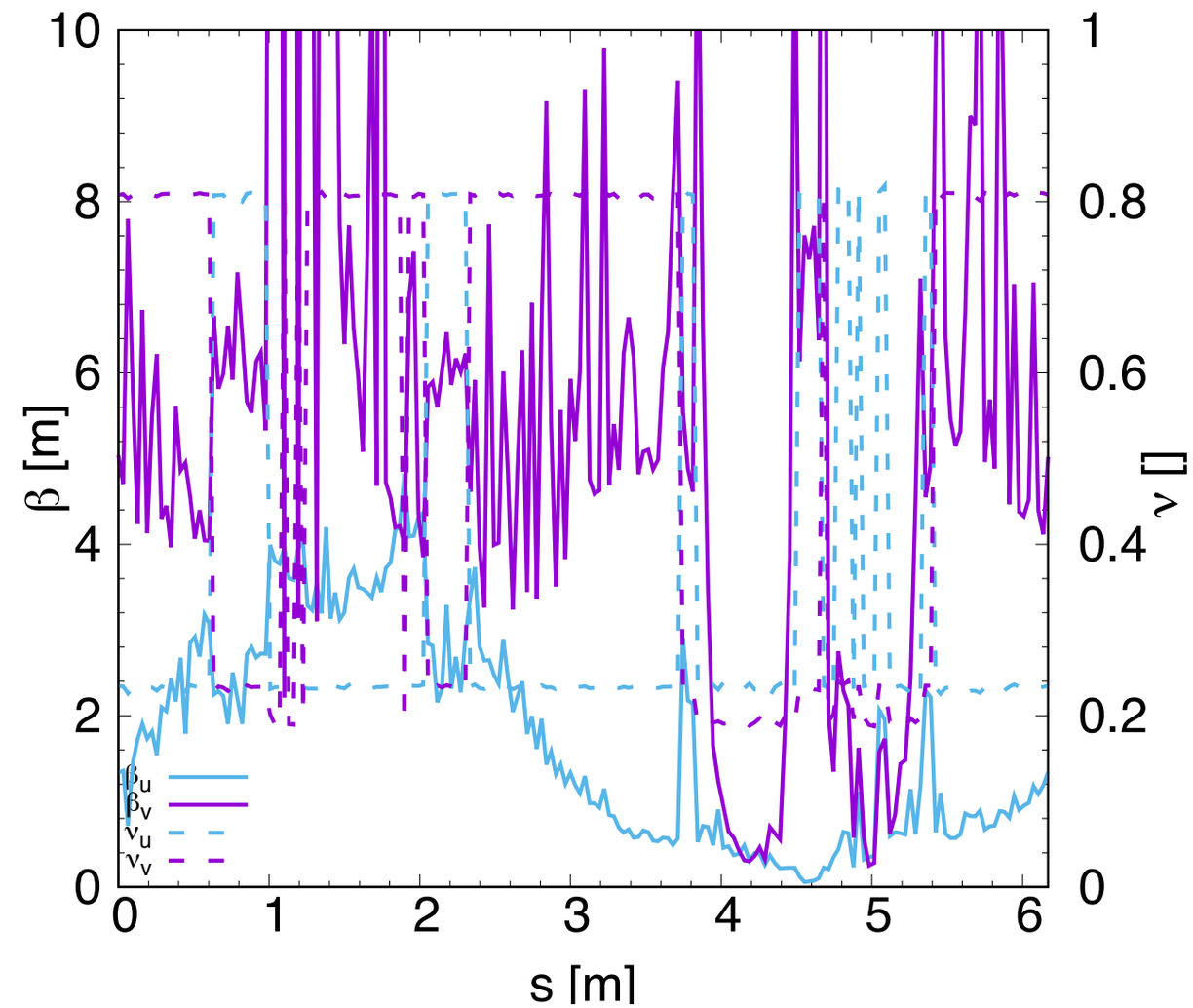

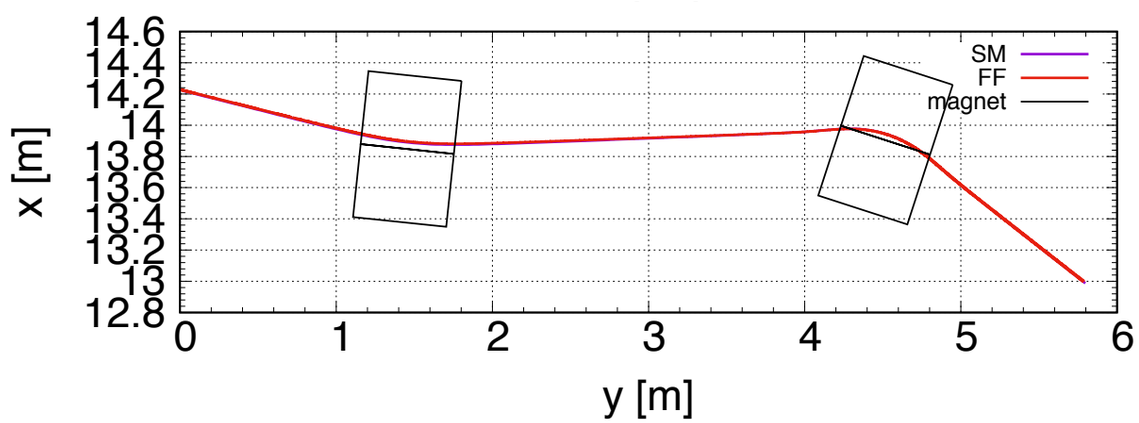

Outline

- Magnetic field model
- Lattice design, optics
- Magnets
- Diagnostics
- Summary

Magnets

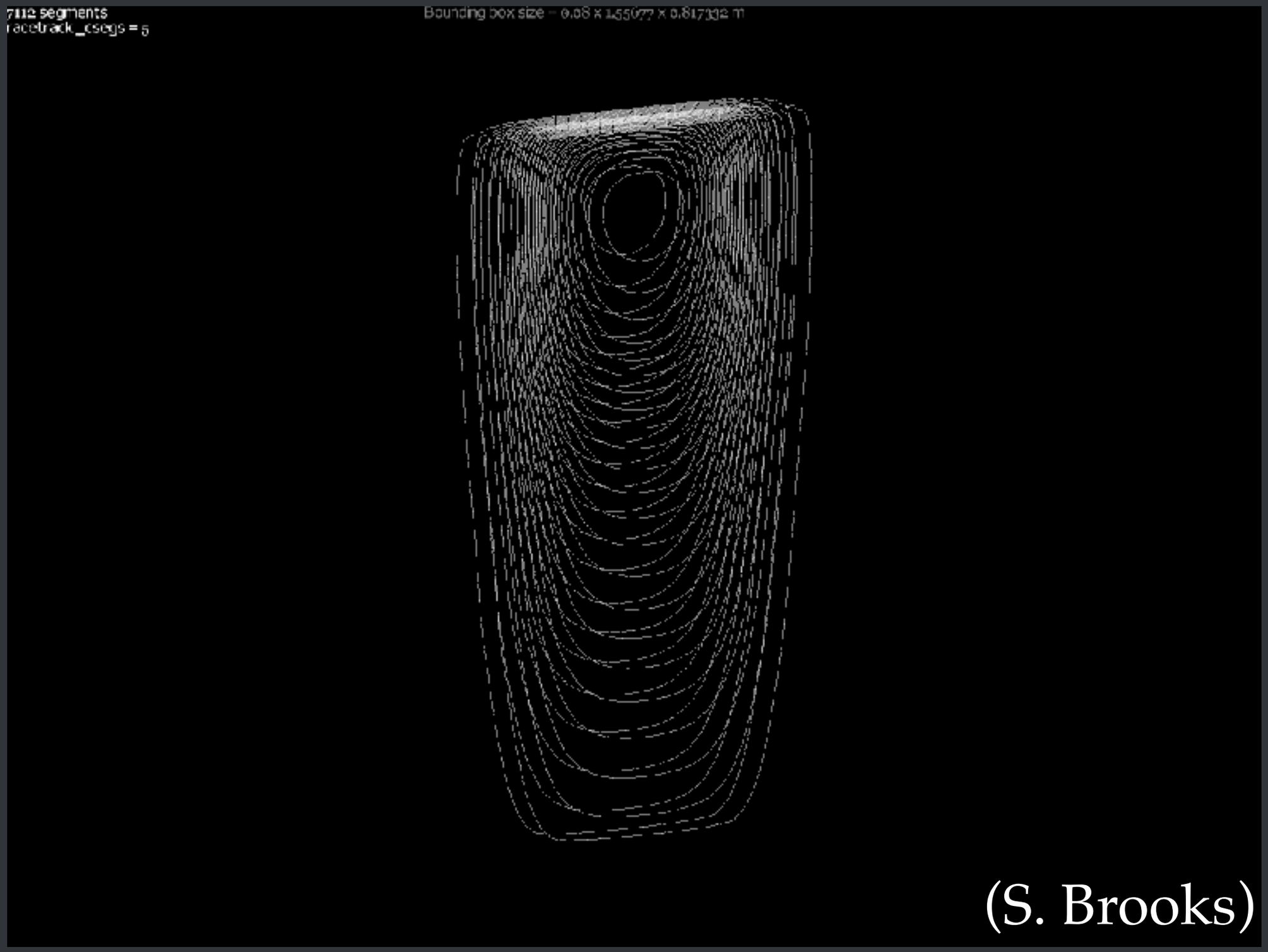

(S. Brooks)

Bedstead with clamps

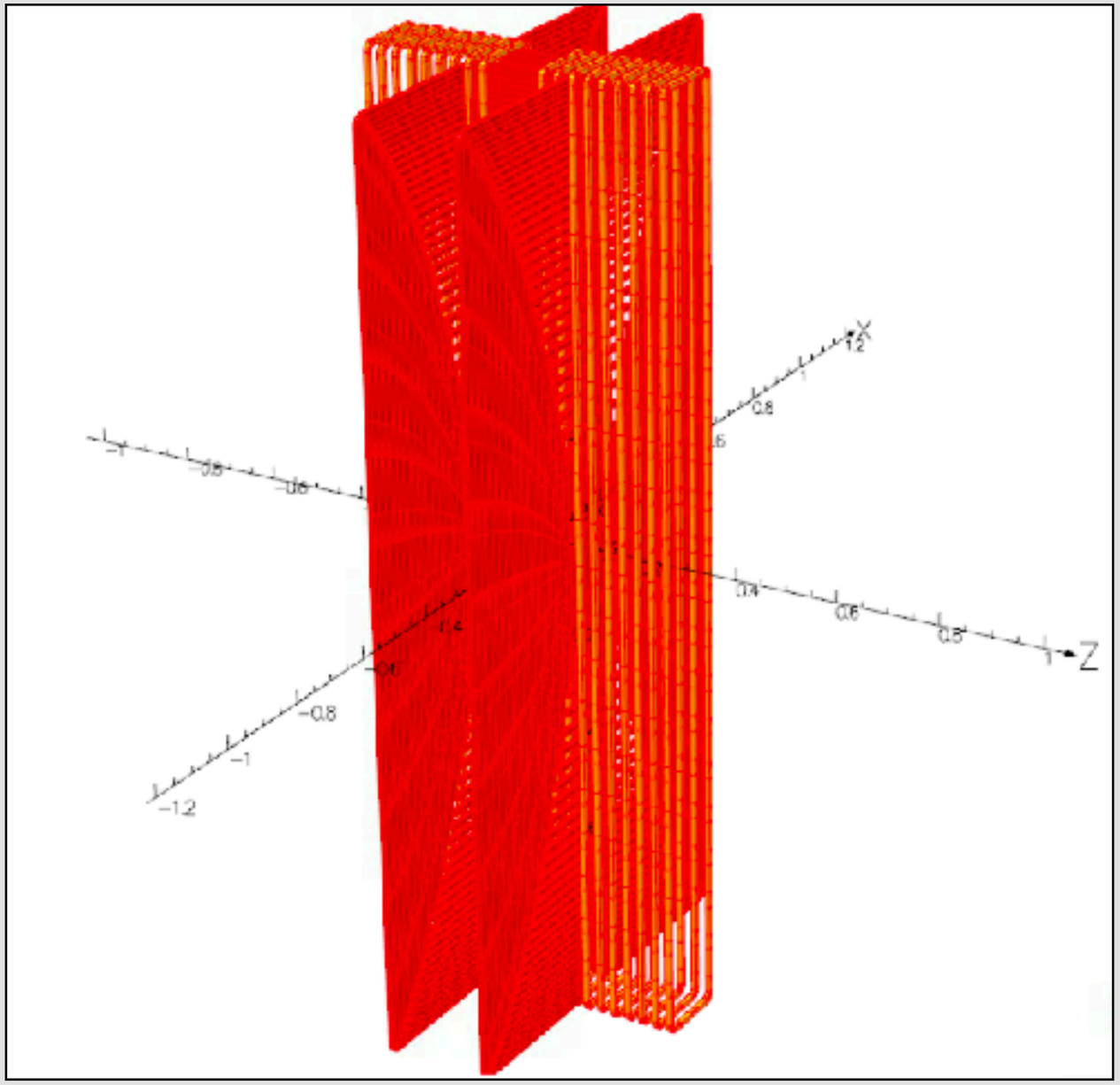

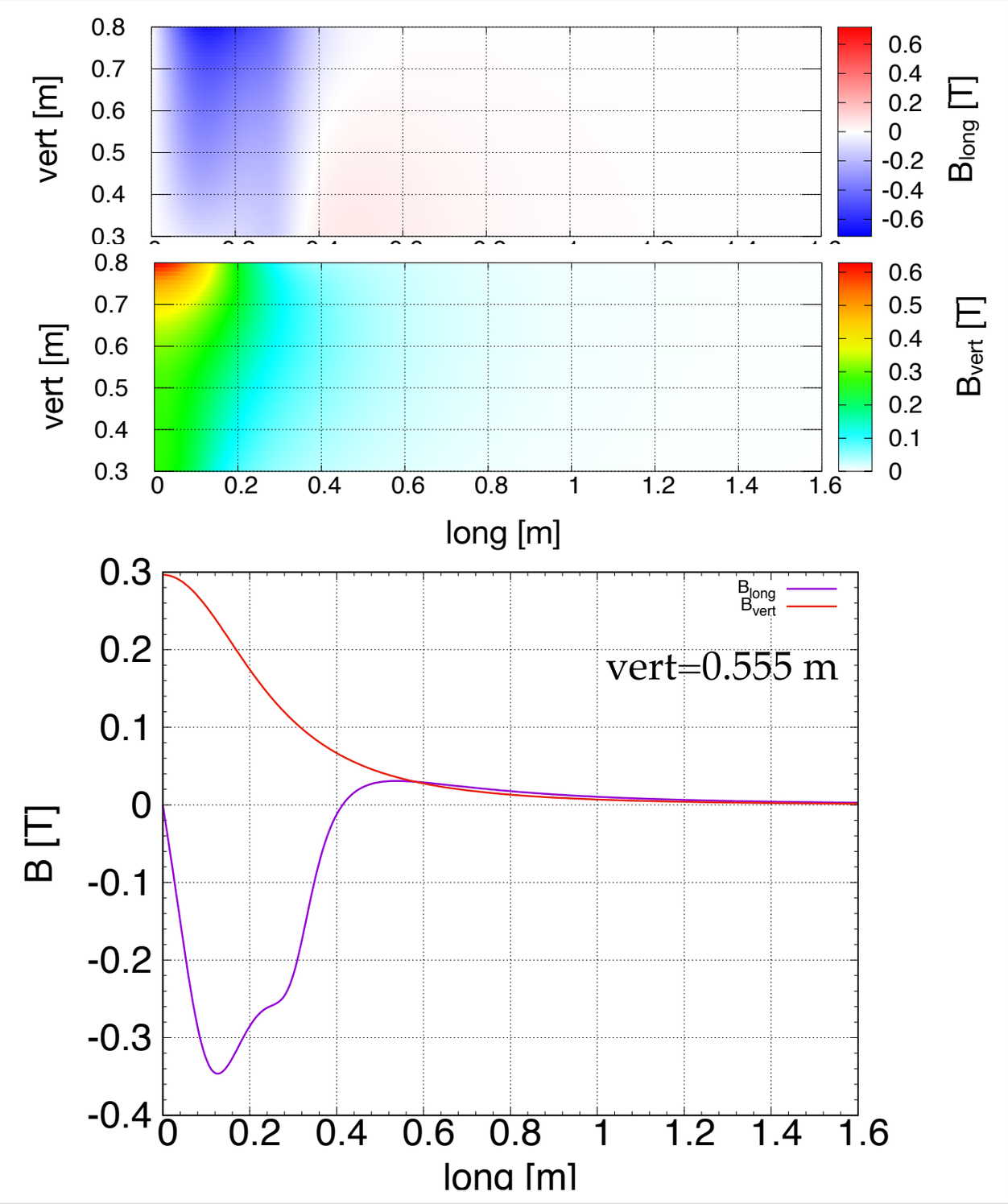

Bedstead with clamps

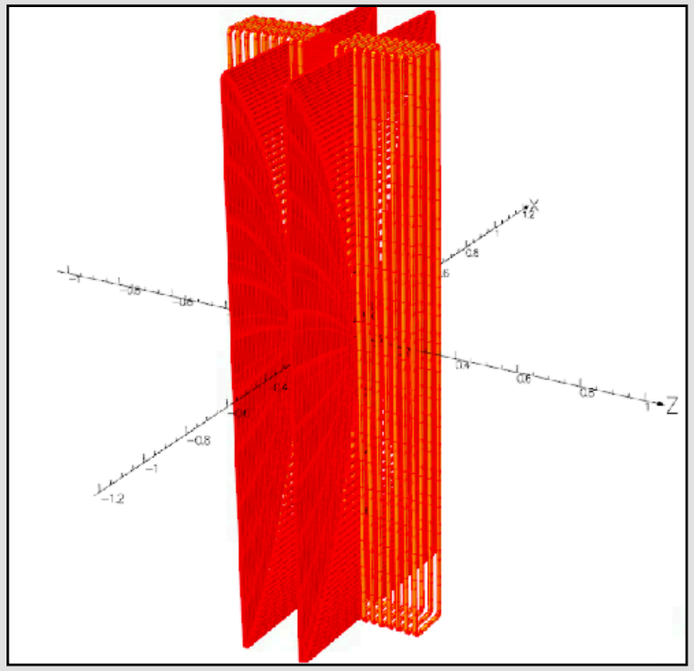

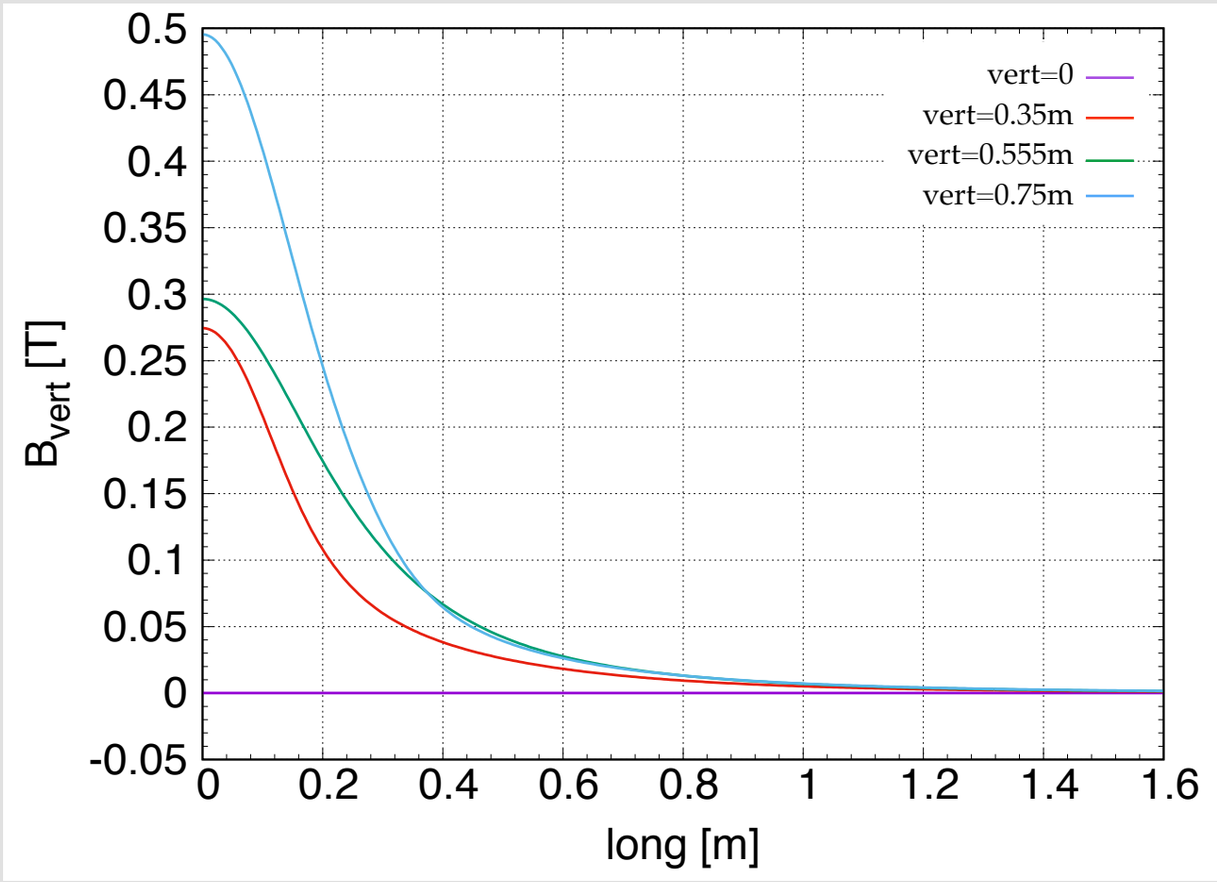

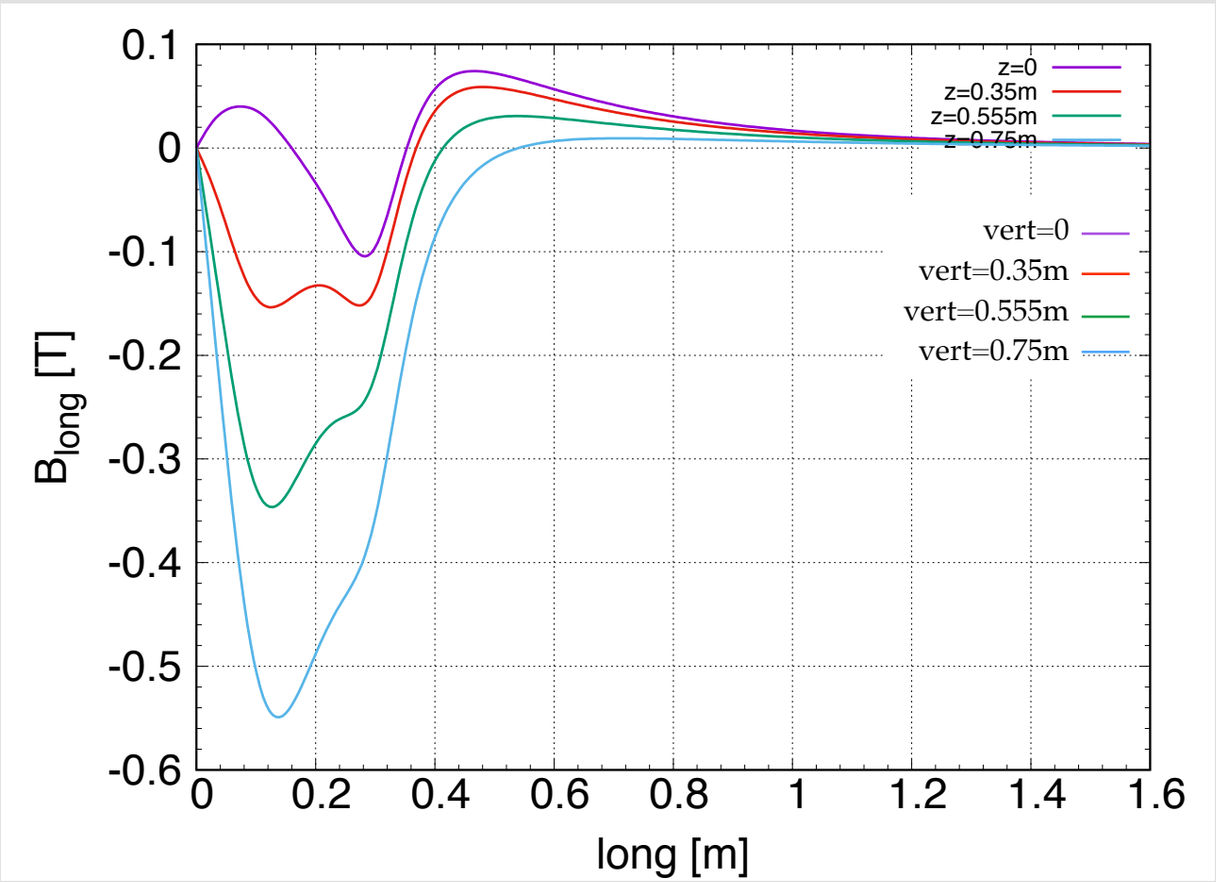

Bedstead with clamps

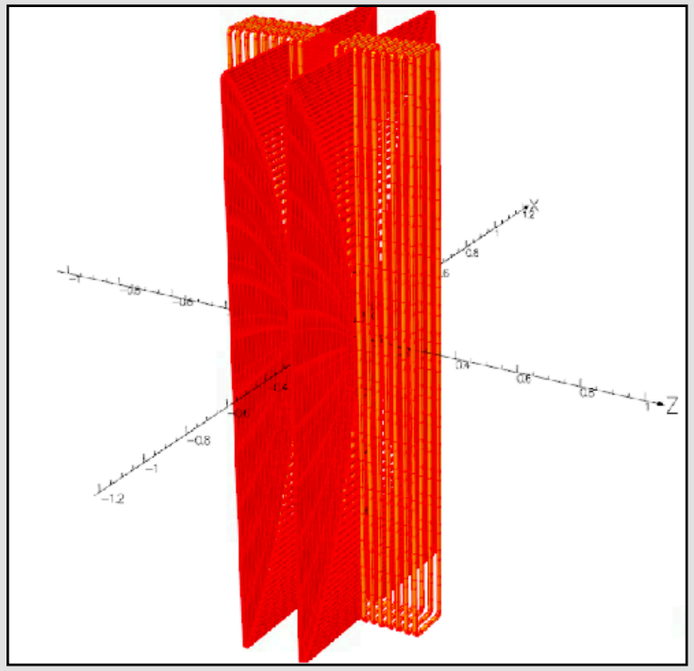

$$m = \frac{1}{\int_l B dl} \frac{d(\int_l B dl)}{dv}$$

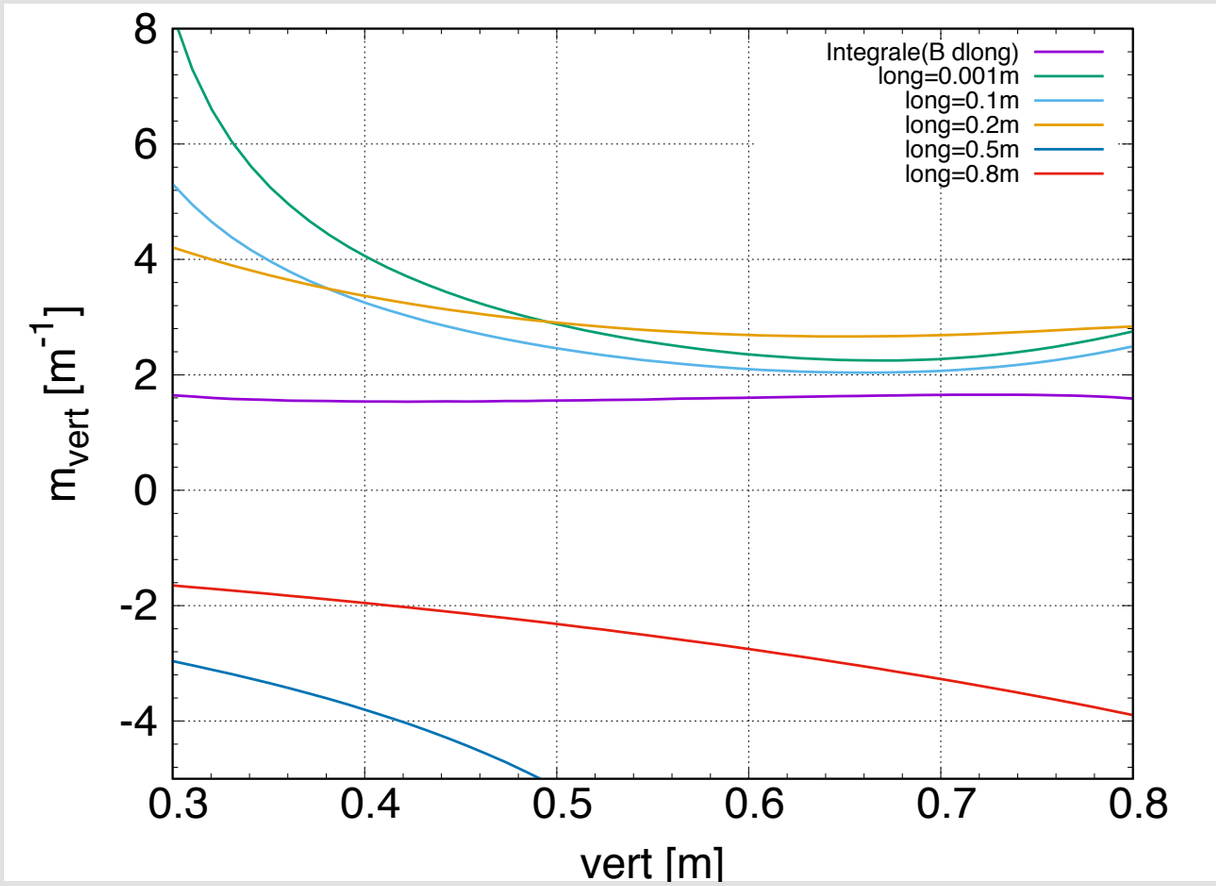

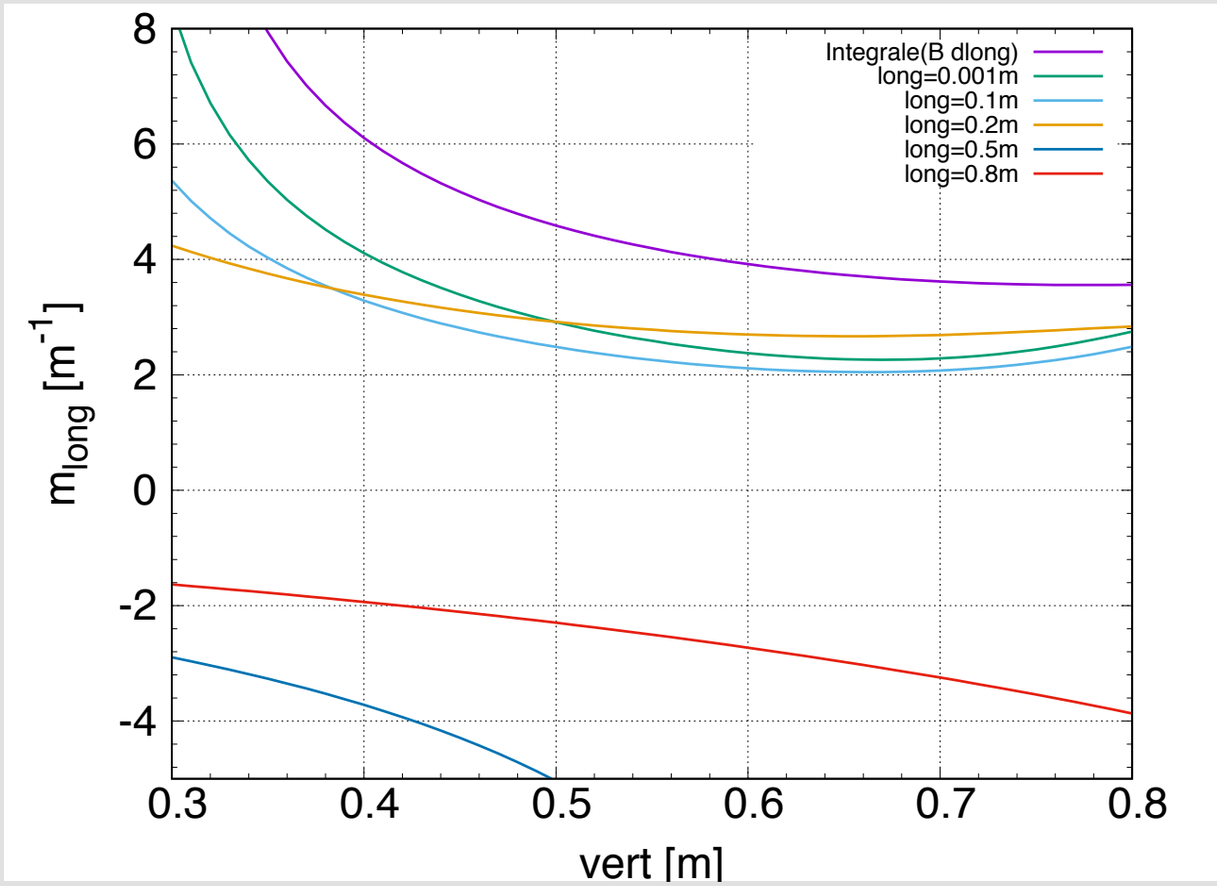

To be optimised

Outline

- Magnetic field model
- Lattice design, optics
- Magnets
- Diagnostics
- Summary

Diagnostics in FETS-ring

- Beam position monitor
- Beam profile monitor
  - Scintillation screen monitor
  - Wire scanner monitor
  - Ionisation profile monitor

(E. Yamakawa)

Preliminary design of H-V BPM

(E. Yamakawa)

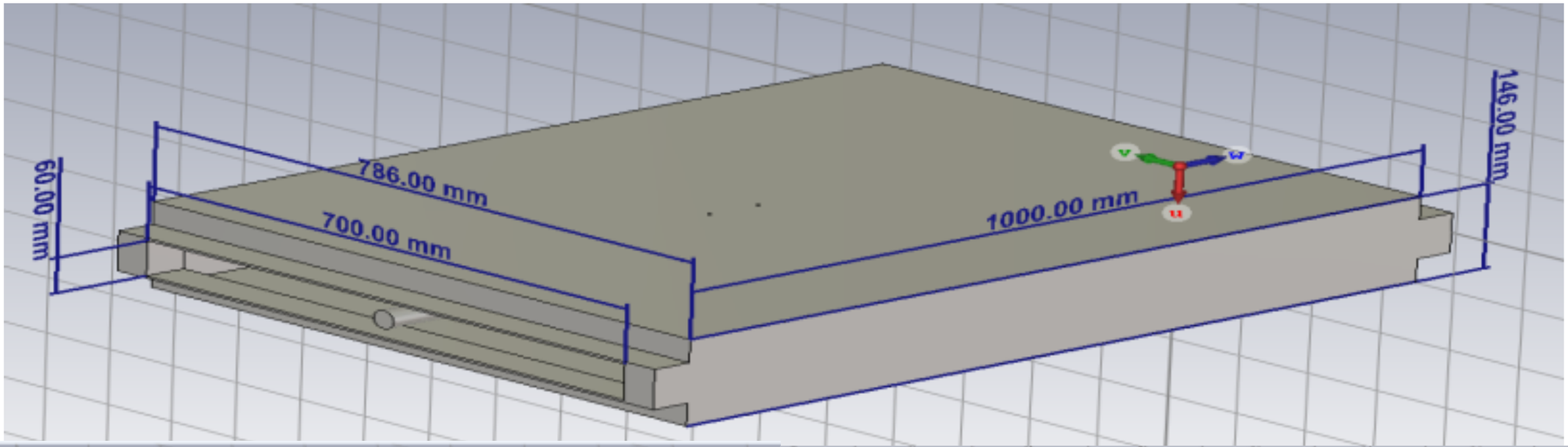

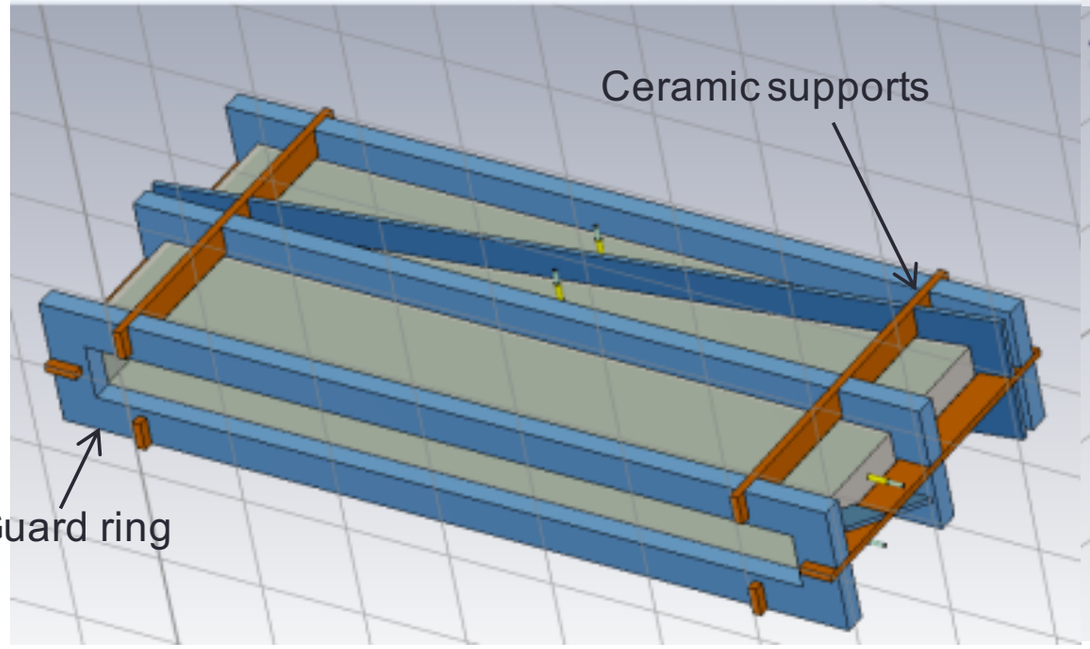

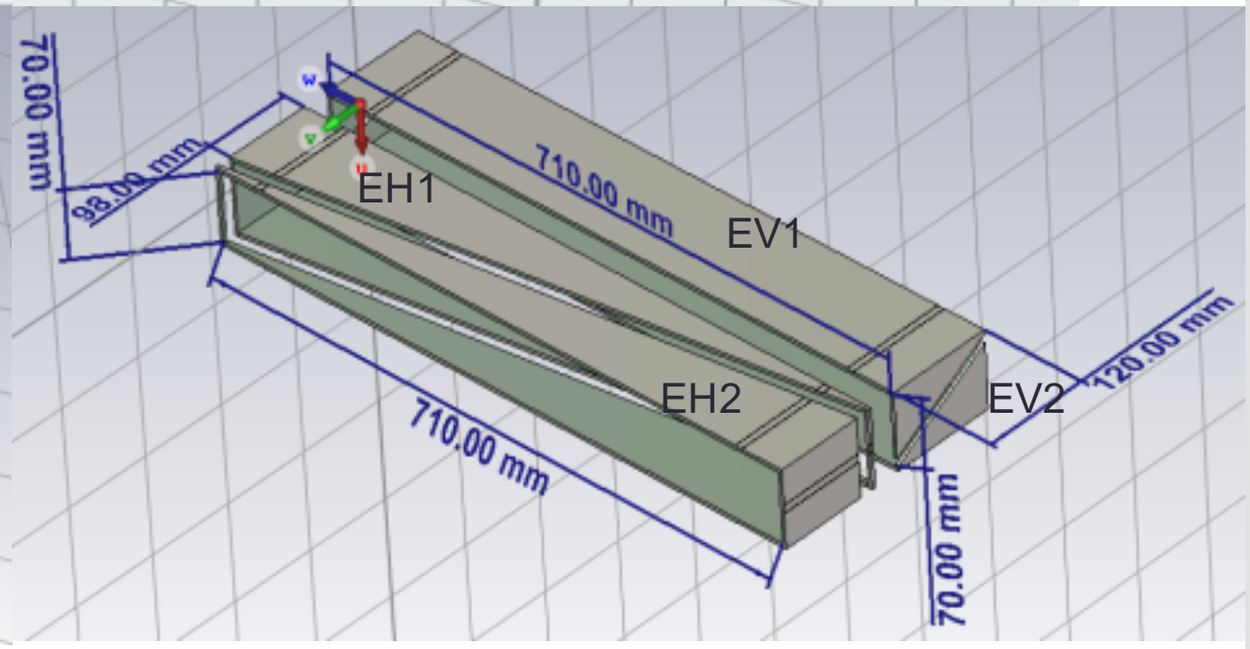

Electrodes:	EH1	EH2	EV1	EV2
Capacitance (C) :	120pF	119 pF	97 pF	97 pF

Horizontal-Vertical IPM

(E. Yamakawa)

Vertical IPM

Required voltage: 10 kV

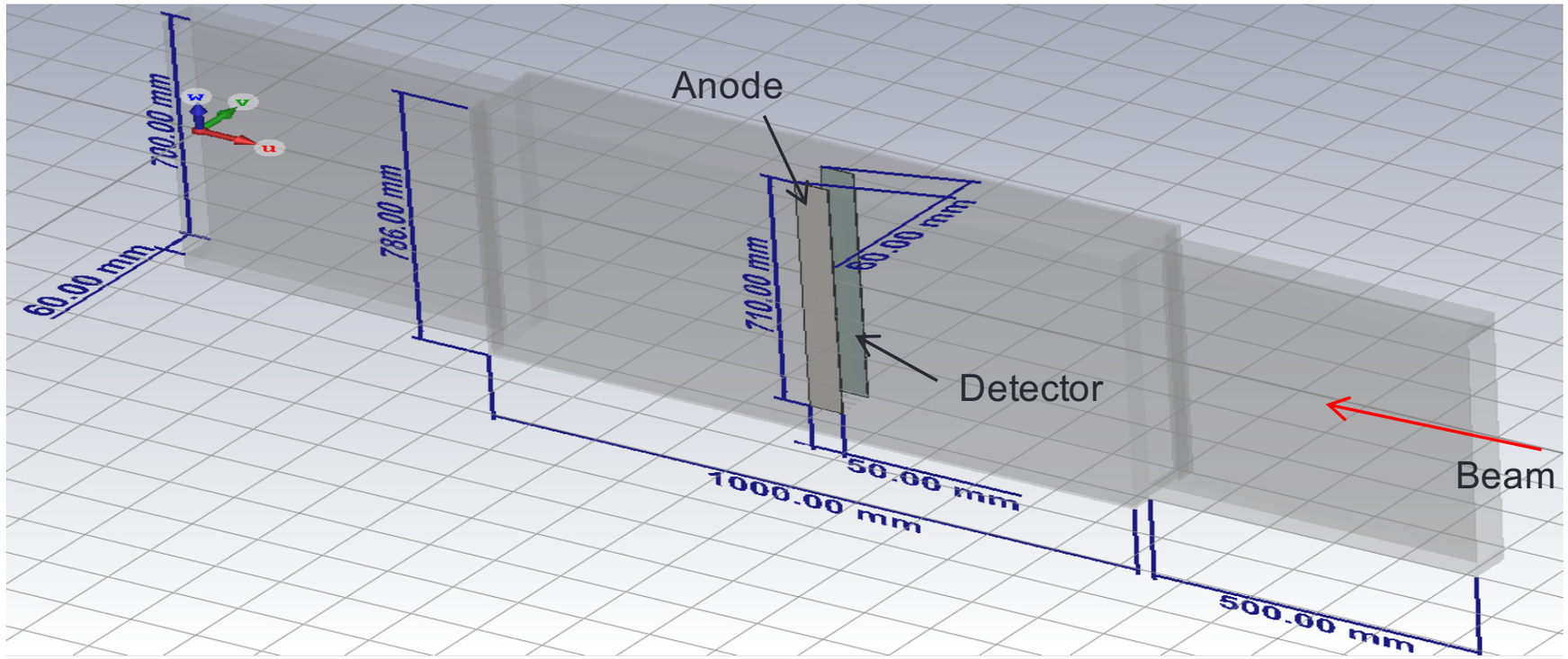

Horizontal IPM

Required voltage: 1.8 MV

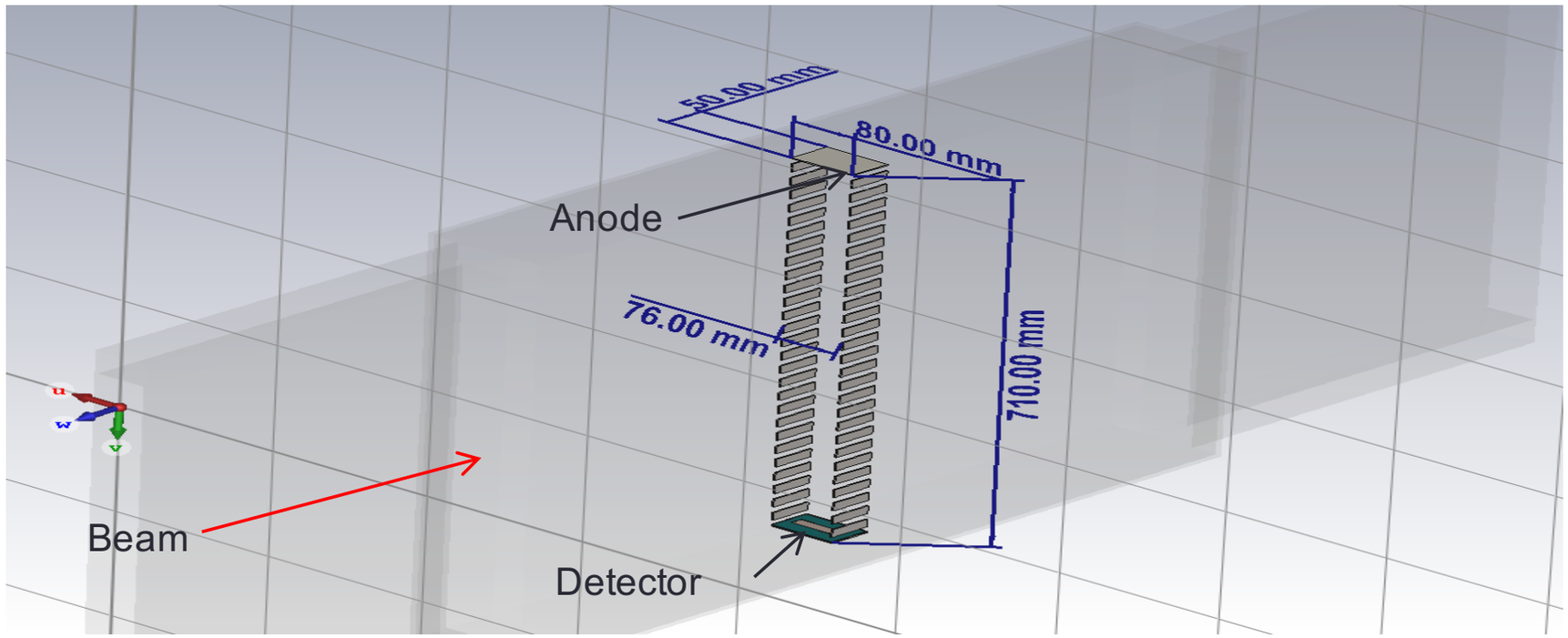

Summary

- Vertical FFA has to follow an exponential field to keep the tune independent of momentum, and a strong longitudinal field in the fringe field region in the mid-plane derives from Maxwell equations. Coupled optics with rotating frame along the longitudinal direction is expected.
- Several designs with good transverse acceptance identified, but still need to fully understand the dynamics.
- Good agreement between several codes, but need to understand where the differences with Opal come from.
- Magnet design with different leads, promising preliminary results. Specifications for the magnet design must include vertical and longitudinal field in the mid-plane.
- Diagnostics designs at advanced stage, prototypes under construction.