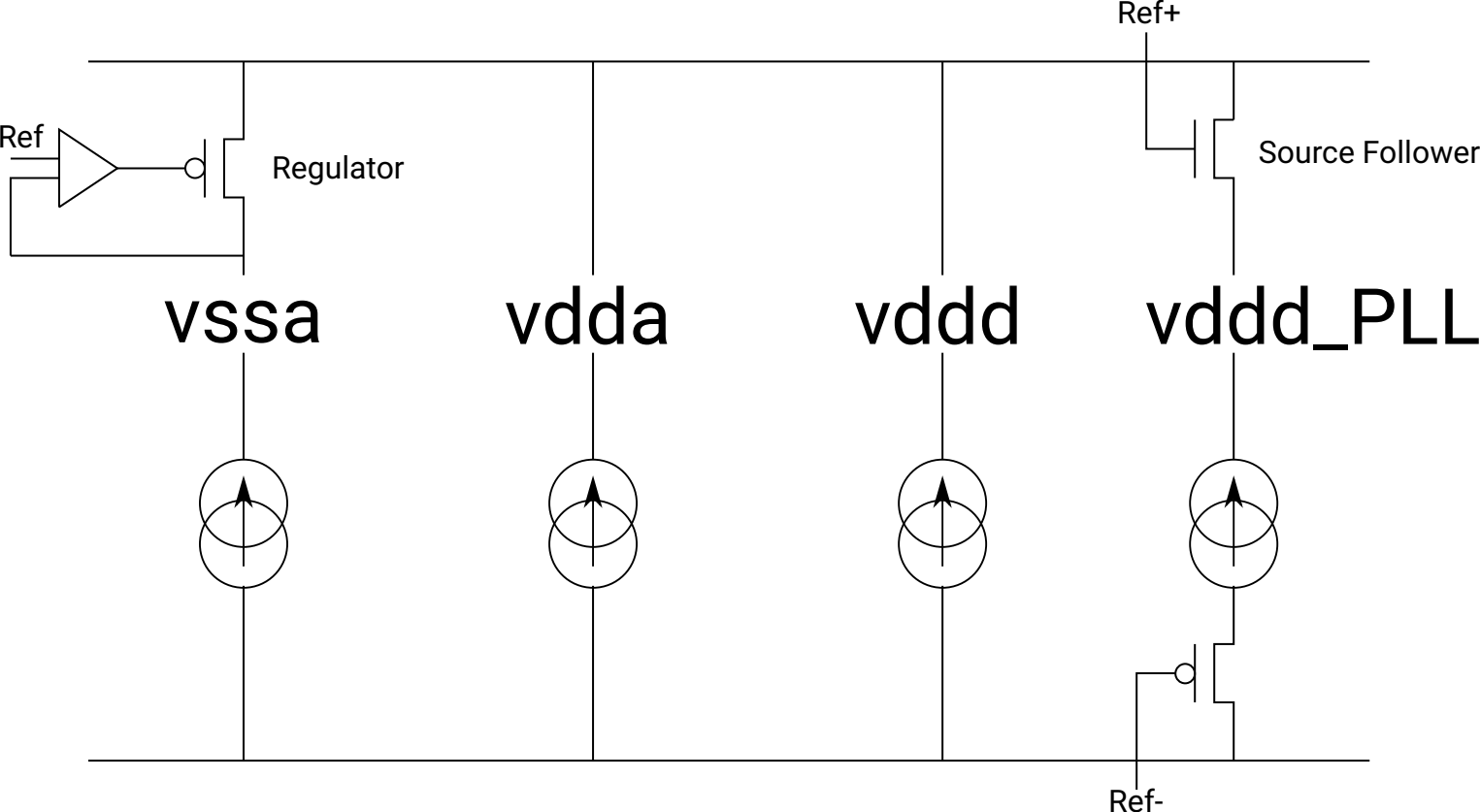
Ref+
Ref
Regulator
Source Follower
vssa
vdda
vddd
vddd_PLL
Ref-