上海交通大學 SHANGHAI JIAO TONG UNIVERSITY

李政道研究所 Tsung-Dao Lee INSTITUTE

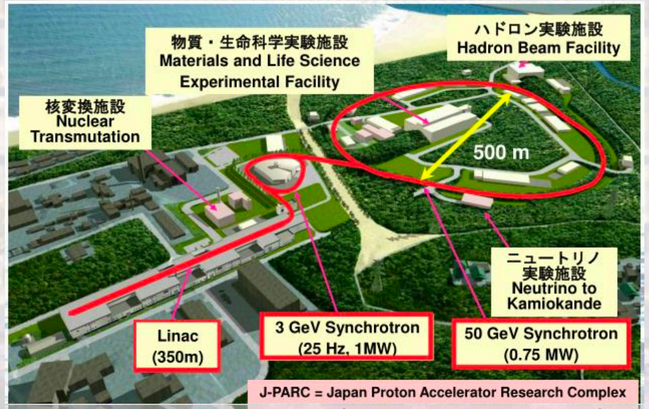

Overview of muon EDM searches: the past, the present and the future

Kim-Siang Khaw

Tsung-Dao Lee Institute, Shanghai Jiao Tong University

Kick-off workshop for the search of a muon EDM using the frozen spin technique at PSI

17-19 Feb 2020, PSI

Content

- Motivation and history of muon EDM searches
- Overview of muon EDM experiments
- Summary

Theory: A. Crivellin (today, 9:10 am)

PSI muEDM: P. Schmidt-Wellenburg (today, 9:50 am)

FNAL g-2/EDM: J. Price (tomorrow, 9 am)

J-PARC g-2/EDM: T. Mibe (tomorrow, 9:40 am)

Motivation of muon EDM searches

- One of the least tested areas of the Standard Model
  - Current limit 23 orders of magnitude above SM prediction (CKM matrix)

A. Crivellin
Feb 17, 9:10 am

- Model-independent search
  - Ambiguity in muon g-2 measurement
  - Generic new physics based on g-2 discrepancy
  - New source of CP-violation

- Model-dependent search
  - Lepton universality, SUSY, LFV models' EFT, etc

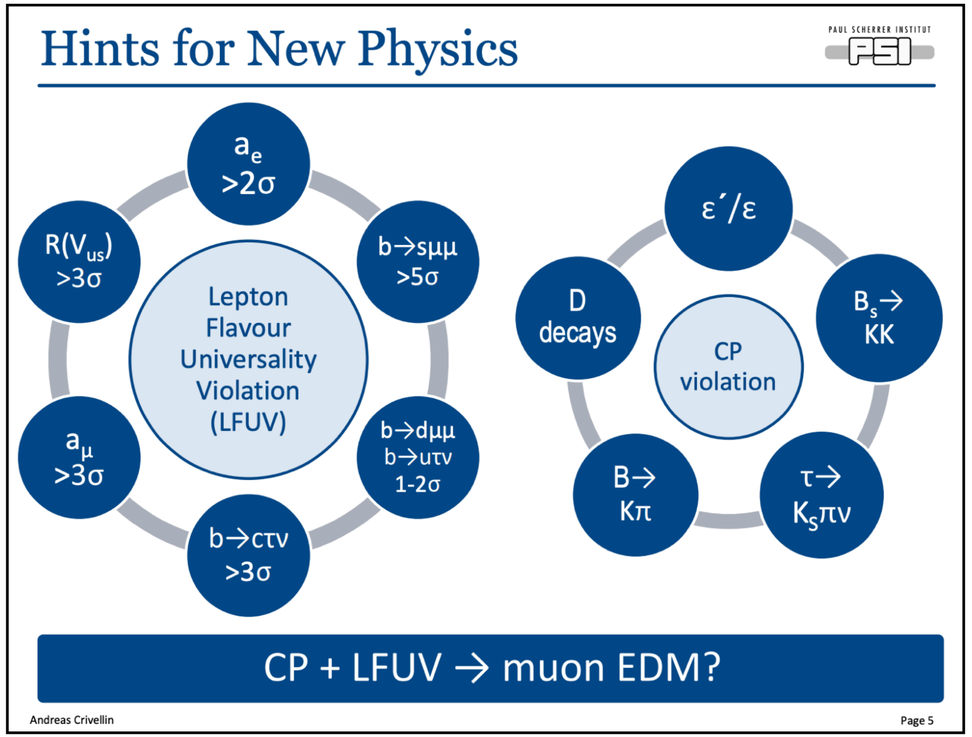

History of muon EDM searches

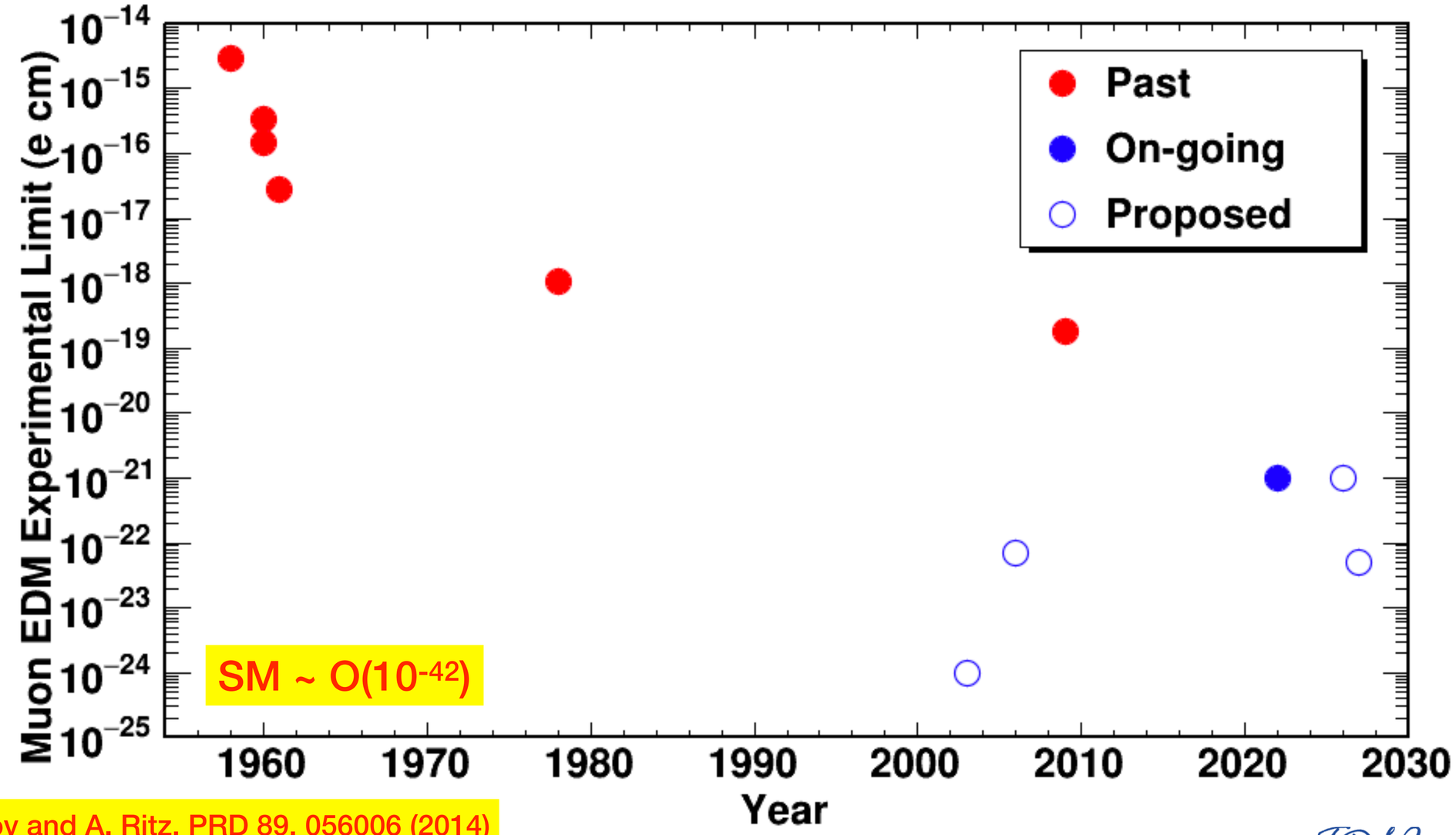

SM: M. Pospelov and A. Ritz, PRD 89, 056006 (2014)

History of muon EDM searches

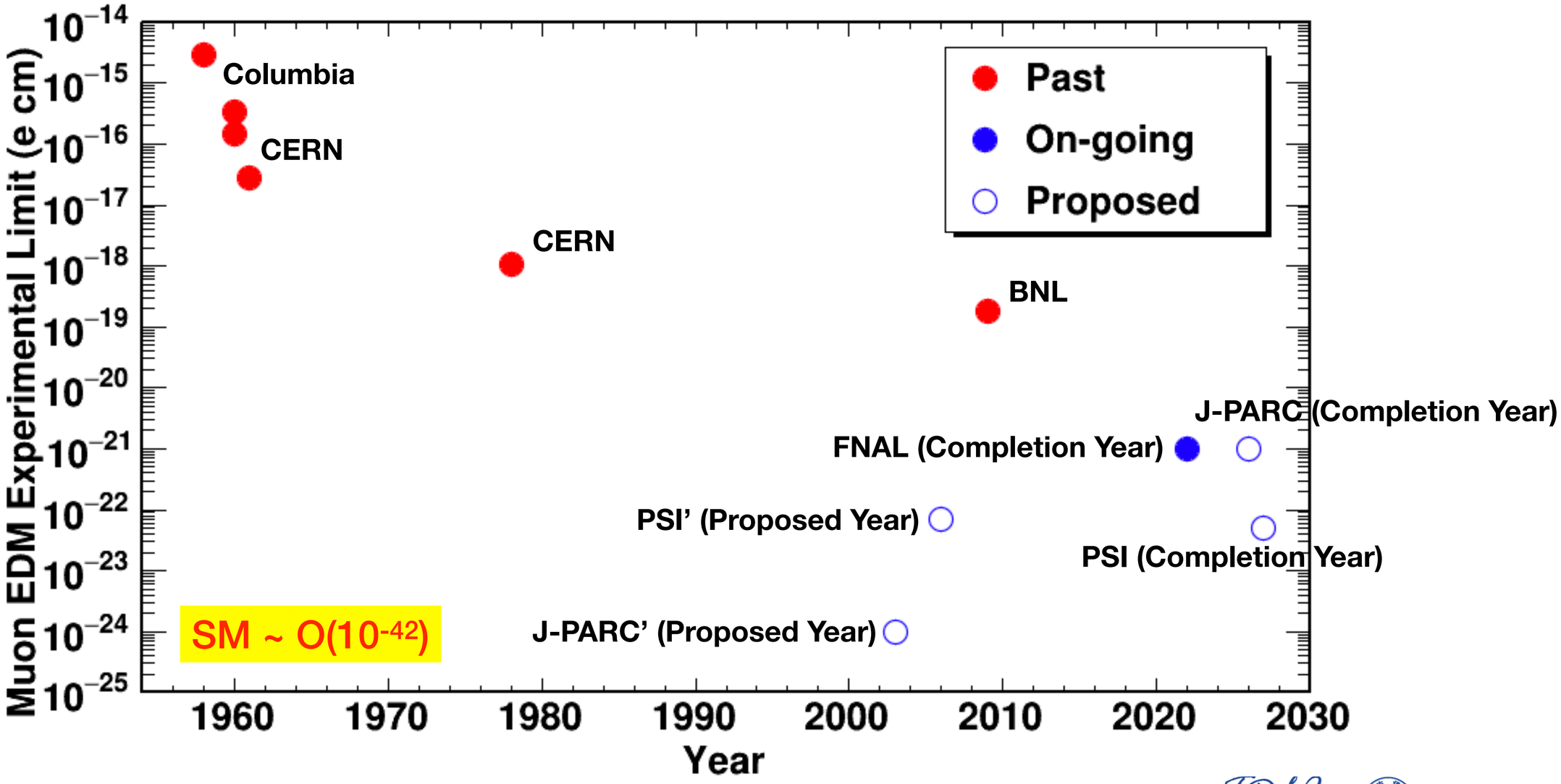

Muon EDM from BSM Physics

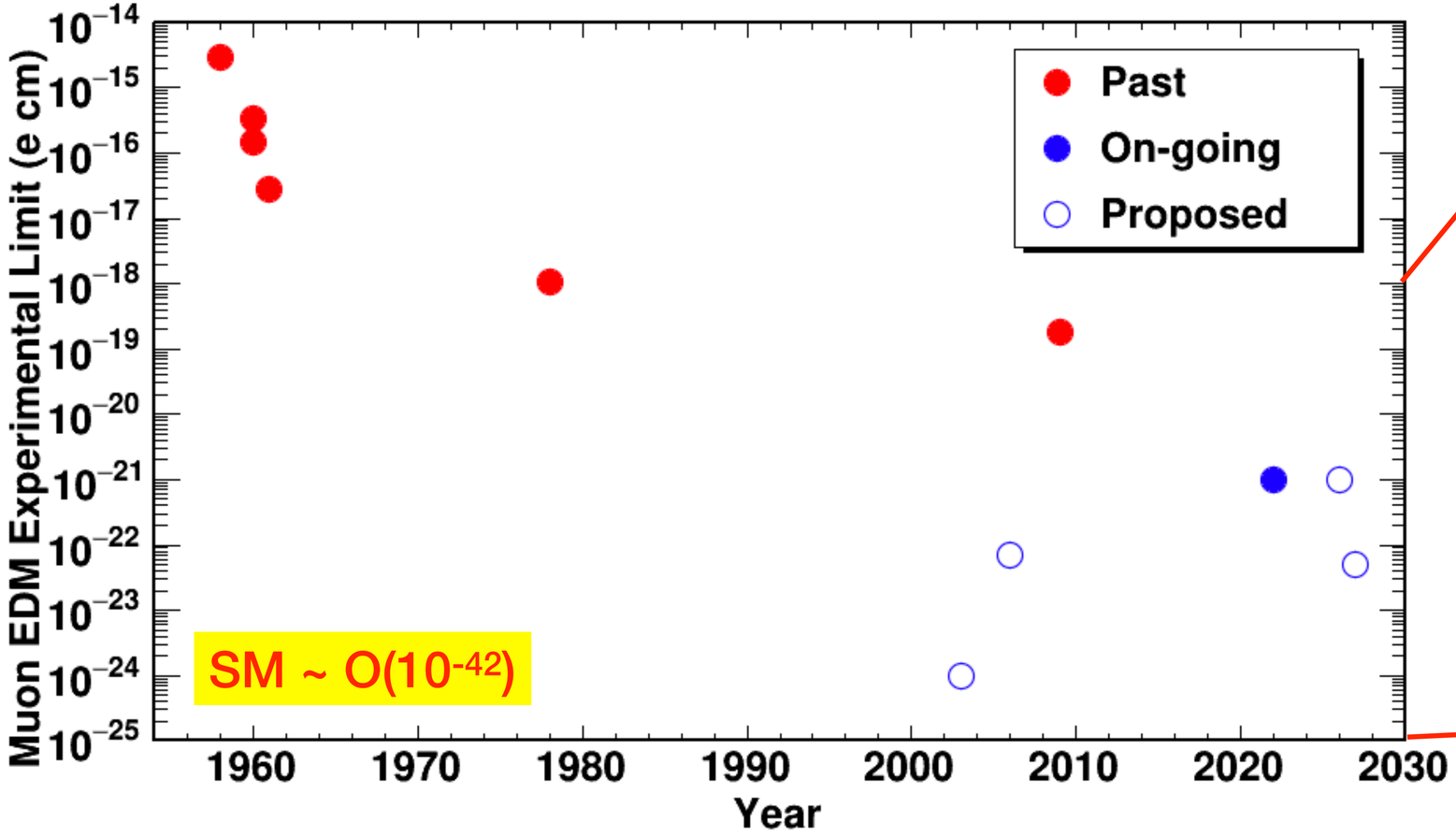

courtesy P. Schmidt-Wellenburg

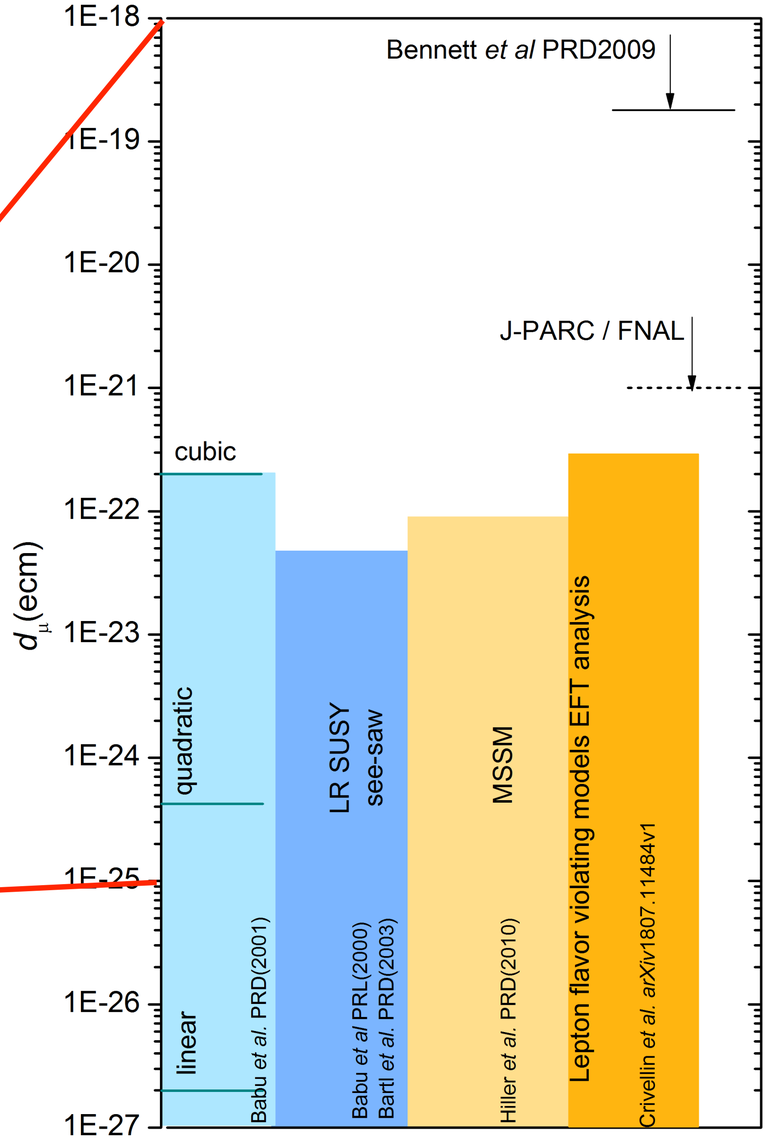

Muon EDM vs other EDM searches

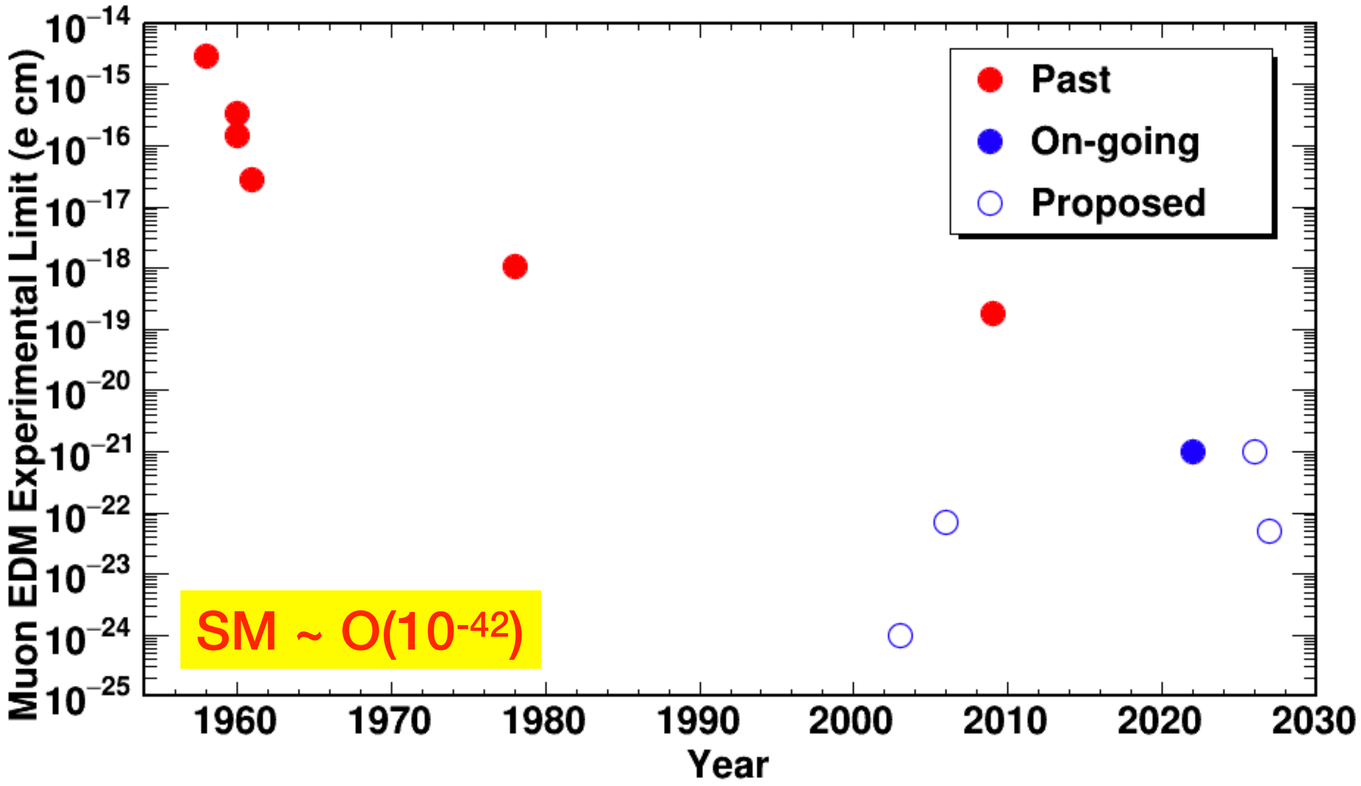

courtesy W. Heil

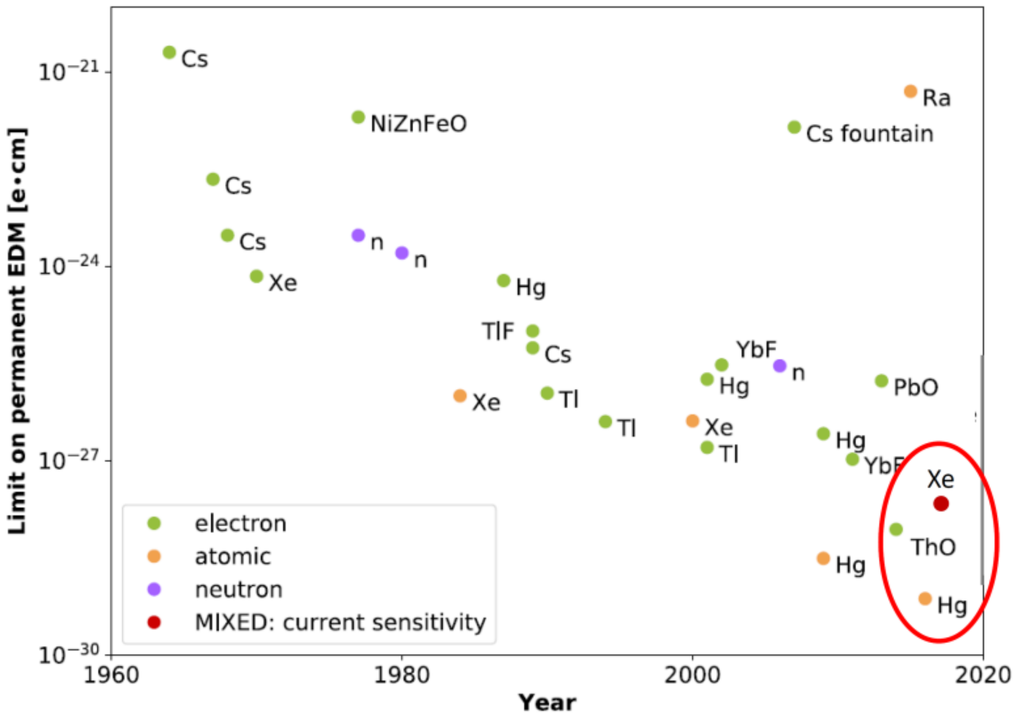

Searches in all systems are complementary and when combined will establish the source of new CP-violation.

Summary of muon EDM searches

Year	Location	Publication	Limit [e cm] (95% C.L.)
1958	Columbia University	PRL 1, 144 (1958)	2.9×10^{-15}
1960	Columbia University	PR 118, 1086 (1960)	3.3×10^{-16}
1960	CERN	Il Nuovo Cimento XVII 3 (1960)	1.5×10^{-16}
1961	CERN	Il Nuovo Cimento XXII 5 (1961)	2.8×10^{-17}
1978	CERN	J. Phys. G 4, 345 (1978)	1.05×10^{-18}
2003	J-PARC	2003 (LOI) [J-PARC L22]	$O(10^{-24})$
2006	PSI	J. Phys. G 37, 085001 (2010)	7×10^{-23}
2009	BNL	PRD 80, 052008 (2009)	1.8×10^{-19}
2022?	FNAL	[FERMILAB-PROPOSAL-0989] (2009)	$O(10^{-21})$
2026?	J-PARC	[KEK_J-PARC-PAC2009-06] (2009)	$O(10^{-21})$
2027?	PSI	PRD 98, 113002 (2018)	5×10^{-23}

4 orders of magnitude in 50 years

Important notes about muon EDM searches

Many experiments have been performed or proposed for the measurement of the EDM of charged particles. These generally run into a difficulty which does not exist for neutral particles ([1]). The problem caused by the charge is simply that to measure an EDM one must apply an electric field at the particle in order to generate an interaction energy for the parameter being observed. A charged particle cannot exist unaccelerated in an electric field.

Il Nuovo Cimento XI 6 (1959)

dipole moments to of the order $e \times 10^{-13}$cm.[5] The existence of longitudinally polarized beams of mu mesons and the availability of muon decay as a polarization analyzer suggest a convenient method by means of which one may search for a muon electric dipole moment.

We note that a transverse electric field will exert a torque proportional to $\vec{\sigma} \times \vec{E}$ which will cause the spin vector $\vec{\sigma}$ to precess away from the longitudinal direction.

In the present experiment the electric field was that created in the rest system of the muon moving in a magnetic field B, and equal to $(1/c) \times \vec{v} \times \vec{B}$. As shown in Fig. 1, the particles are first

PRL 1, 144 (1958)

Overview of muon EDM searches

- **Pre-storage ring:**
  Columbia (1958-1959), CERN I (1960-1961)
- **Storage ring (parasitic with g-2):**
  CERN III (1975-1976), BNL (1999-2001), FNAL (2018-2022), J-PARC (2024-2026)
- **Lattice storage ring (frozen spin):**
  J-PARC (2003)
- **Compact storage ring (frozen spin):**
  PSI (2006), PSI (2026-2027)

Closely related to the developments in muon g-2 measurements

Pre-storage ring (Columbia 1958-1959)

VOLUME 1, NUMBER 4 PHYSICAL REVIEW LETTERS AUGUST 15, 1958

ELECTRIC DIPOLE MOMENT OF THE MUON *

D. Berley, R.L. Garwin,† G. Gidal,
and L. M. Lederman

Columbia University, New York, New York
(Received July 18, 1958)

The problem of the muon rest mass and its possible origin in an unknown interaction demands very close examination of the properties of this particle. For example, the magnetic moment should be measured with high precision[1]; some progress in this direction has recently been made.[2] The present note describes a search for an electric dipole moment in the muon with a sensitivity of the order of 1% of a "natural" moment: e times the muon Compton wavelength (1.85×10^{-13}cm).

PHYSICAL REVIEW VOLUME 118, NUMBER 4 MAY 15, 1960

Search for an Electric Dipole Moment Structure of the Muon*†

DAVID BERLEY AND GEORGE GIDAL‡
Columbia University, New York, New York
(Received December 8, 1959)

A search was made for an electric dipole moment in the muon with a sensitivity of 0.1% of a muon Compton wavelength times the electronic charge. The motivation for this investigation is provided by the interest in finding some property of the muon which would indicate a structure different from that of the electron, even though such a structure would violate both parity conservation and time reversal invariance. The muons pass through the fringe field of the cyclotron and an additional system of magnets producing an electric field in their rest frame. Any electric dipole moment would precess about this field producing a vertical plane component of spin transverse to the momentum. This is detected by measuring the electron asymmetry in the plane perpendicular to the momentum. The absence of such a component within the stated sensitivity gives an upper limit to the electric dipole moment of the muon as 2×10^{-16} cm$\times$the charge of the electron.

Caution: Fig. 1 ⇔ Fig. 2

Motivation back then: origin of muon rest mass, structure in muon (vs electron)

Pre-storage ring (Columbia 1958)

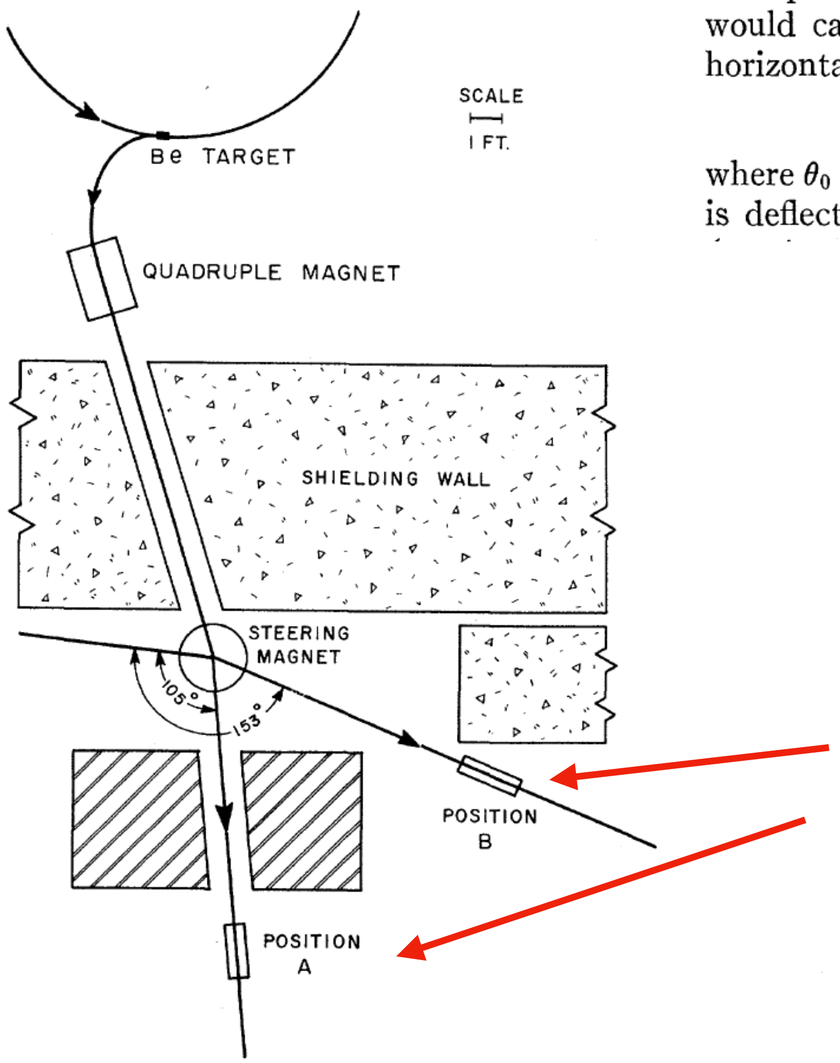

The presence of an electric dipole moment $fe\hbar/mc$ would cause a rotation of the spin vector out of the horizontal plane by an amount

$$\theta = 2f\theta_0\beta\gamma,$$

where θ_0 is the total angle through which the trajectory is deflected by the magnetic fields and $\gamma = 1/(1-\beta^2)^{\frac{1}{2}}$

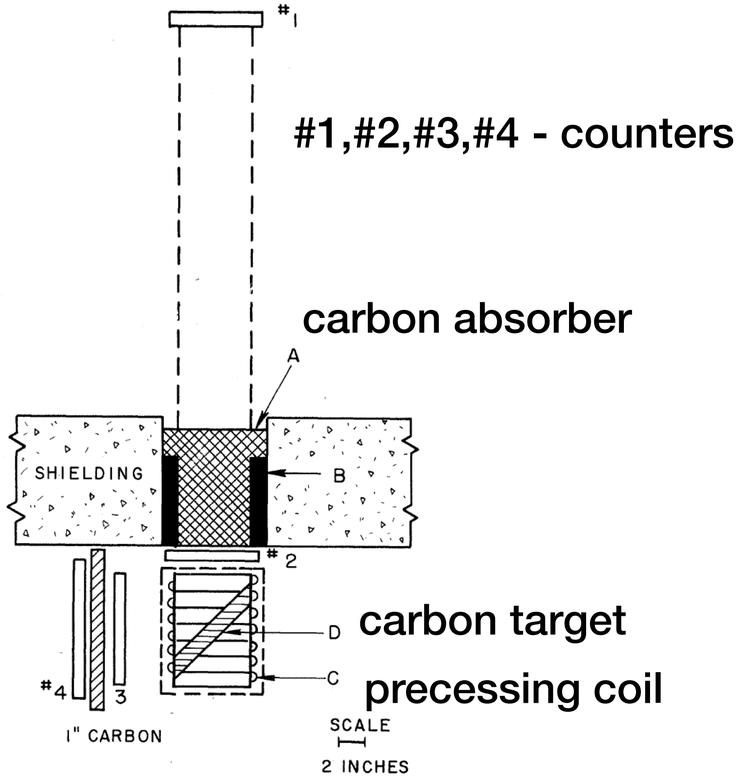

Muon Polarimeter

Pre-storage ring (Columbia 1958)

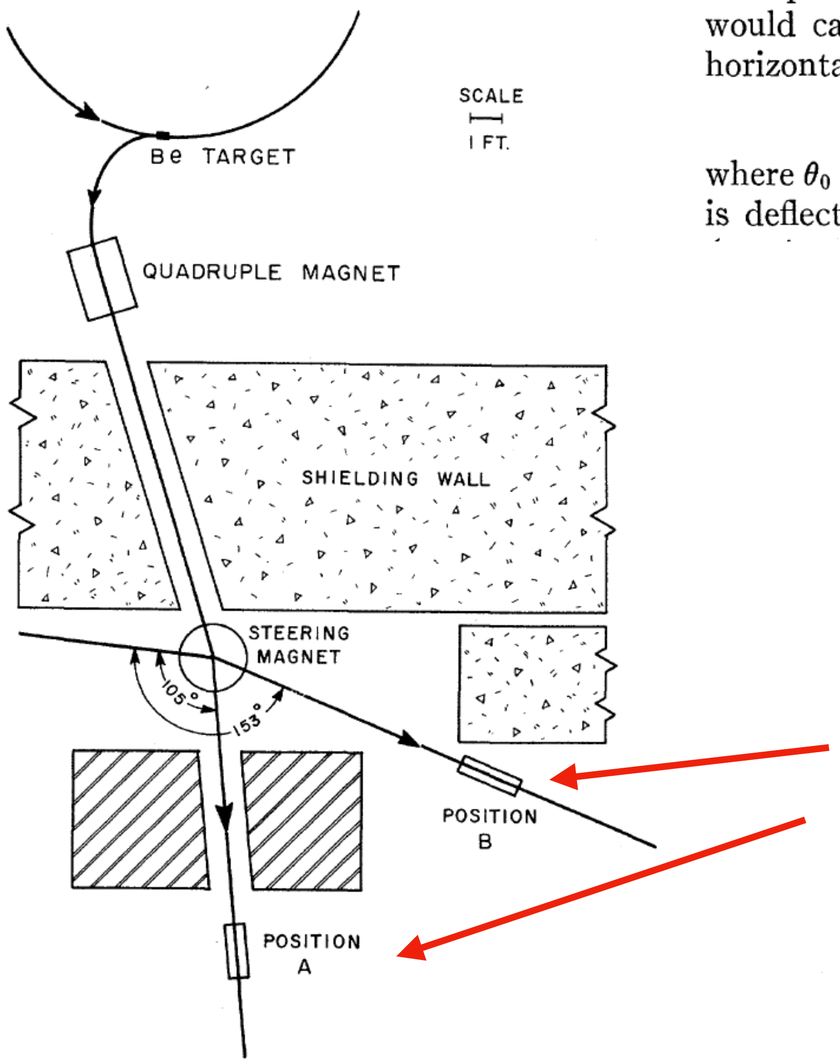

The presence of an electric dipole moment $fe\hbar/mc$ would cause a rotation of the spin vector out of the horizontal plane by an amount

$$\theta = 2f\theta_0\beta\gamma,$$

where θ_0 is the total angle through which the trajectory is deflected by the magnetic fields and $\gamma = 1/(1-\beta^2)^{\frac{1}{2}}$

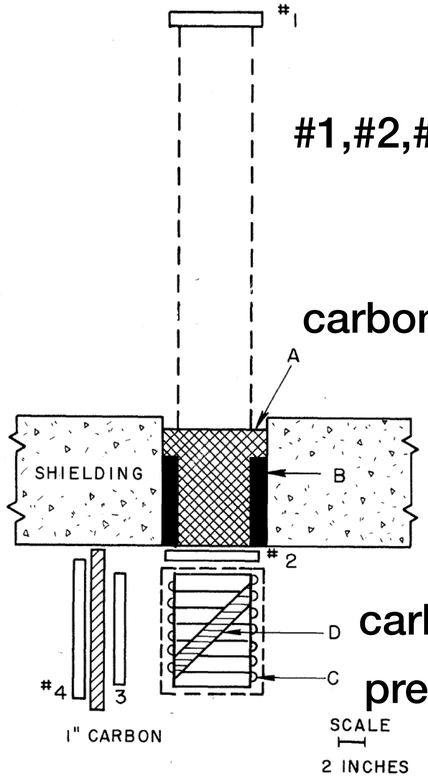

#1,#2,#3,#4 - counters

carbon absorber

carbon target

precessing coil

Muon Polarimeter

Measurements

$\theta = +0.64 \pm 0.024$ radians (105° run),
$\theta = +0.017 \pm 0.028$ radians (153° run).

$$f = \frac{\theta_s}{2\beta\gamma\theta_0}$$

Combining the two runs, the value of the electric dipole moment of the muon is found to be (in units of $e\hbar/mc$)

$$f = 0.006 \pm 0.005.$$

This corresponds to a unit charge multiplied by a distance of $(1.1 \pm 0.9) \times 10^{-15}$cm. The result is consistent with a vanishing dipole moment expected on the basis of time-reversal invariance.

Pre-storage ring (Columbia 1959)

A follow up with improved apparatus

$$f = \frac{\theta_s}{2\beta\gamma\theta_0}$$

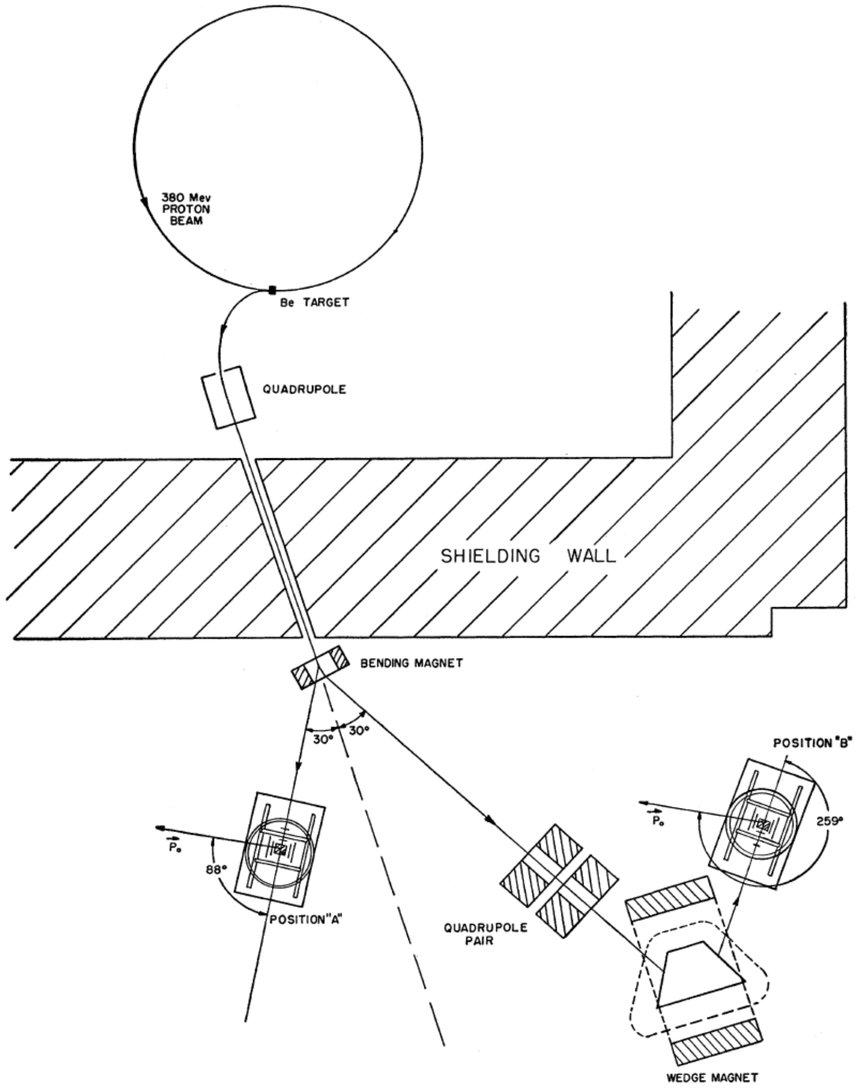

Surrounded by Helmholtz coils

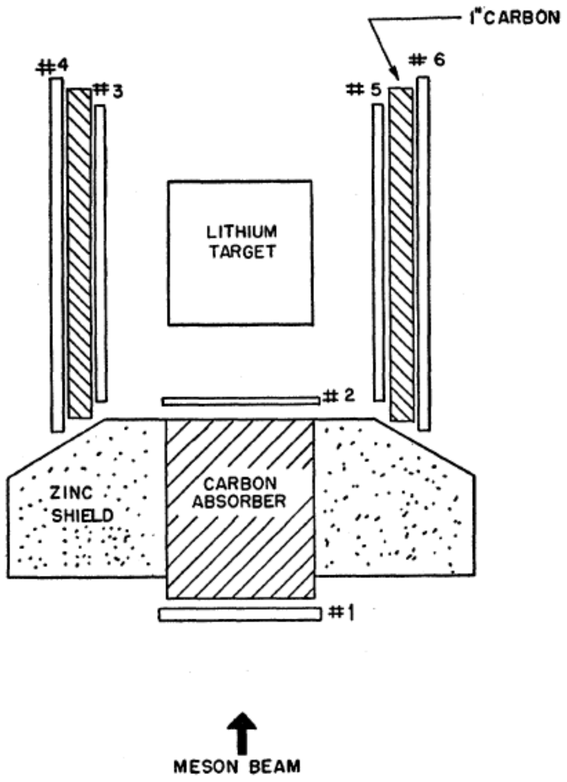

Pre-storage ring (Columbia 1959)

A follow up with improved apparatus

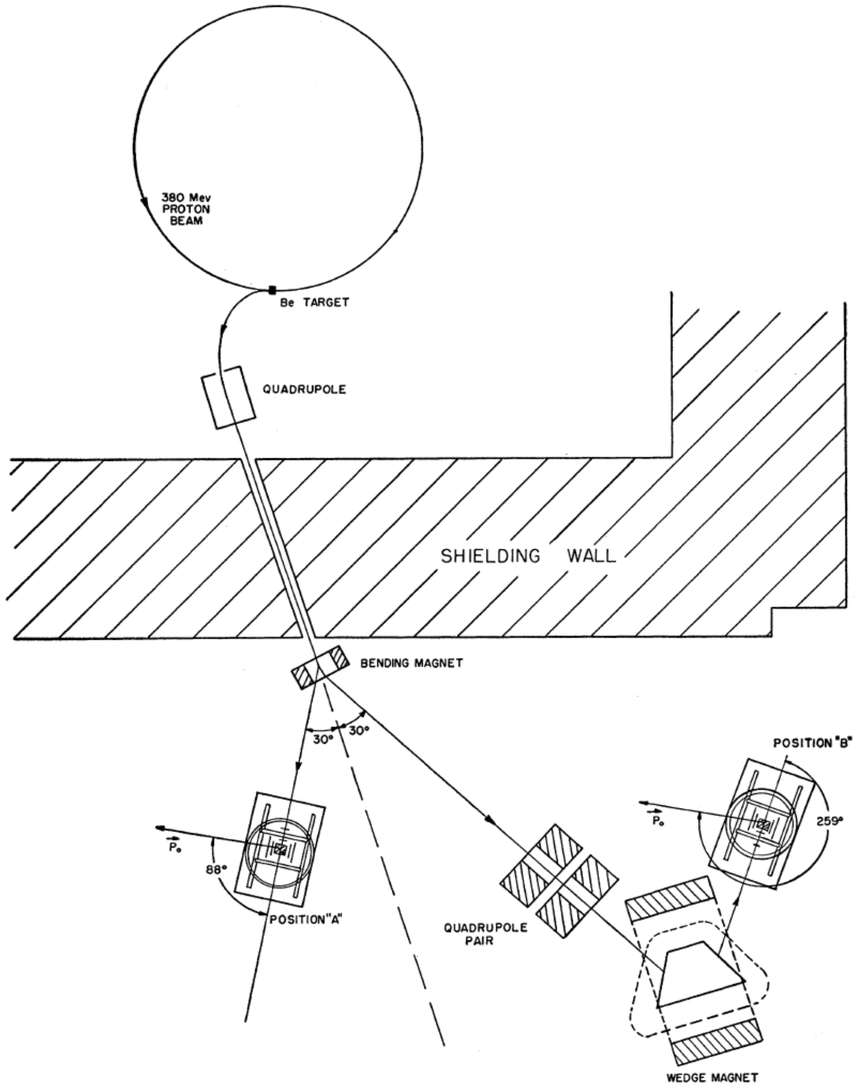

TABLE I. Summary of data.

Position	x_3	aP_3	x_1	aP_1	$\theta = aP_1/aP_3$ radians	f
A (88° run)	1.45±0.03	0.18±0.01	1.004±0.003	0.002±0.0015	0.011±0.008	0.002±0.002
B (259° run)	1.55±0.04	0.22±0.01	0.995±0.005	−0.0025±0.0025	−0.011±0.011	−0.0007±0.0008

Surrounded by Helmholtz coils

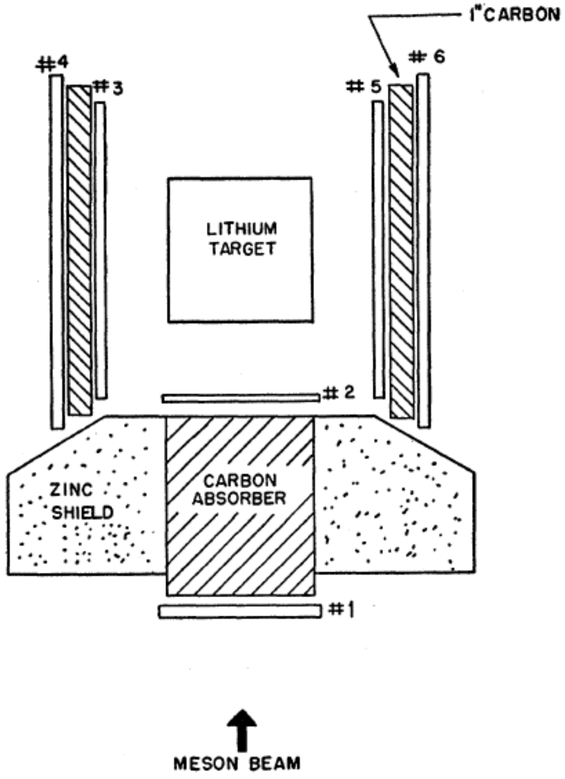

Because of the complete up-down symmetry of the production process, it is unlikely that the muons have an initial component of polarization out of the horizontal plane. The use of the total bending angle is therefore justified[17] and combining the results of positions A and B, one obtains

$$f = -0.0004 \pm 0.0007.$$

This corresponds to an EDM $\lesssim e \times 2 \times 10^{-16}$ cm. We note that (f) is approximately an upper limit for the probability amplitude for both parity and time reversal mixing.

Pre-storage ring (CERN 1960-1961)

IL NUOVO CIMENTO Vol. XVII, N. 3 1° Agosto 1960

85 MeV/c for 28 turns

A Method for Trapping Muons in Magnetic Fields, and Its Application to a Redetermination of the EDM of the Muon.

G. Charpak (*), L. M. Lederman (**), J. C. Sens and A. Zichichi
CERN - Geneva

(ricevuto il 4 Aprile 1960)

Summary. — A method for trapping muons in magnetic fields is described together with its application to higher accuracy determination of the electric dipole moment of the muon. The value found is:

$$\mathrm{EDM} \leqslant e(5 \pm 5) \cdot 10^{-17}\ \mathrm{cm}$$

consistent with time reversal invariance.

IL NUOVO CIMENTO Vol. XXII, N. 5 1° Dicembre 1961

85 MeV/c for 1200 turns

A New Limit to the Electric Dipole Moment of the Muon.

G. Charpak (*), F. J. M. Farley, R. L. Garwin (**), T. Muller (***), J. C. Sens and A. Zichichi
CERN - Geneva

(ricevuto il 18 Settembre 1961)

Summary. — By storing polarized positive muons in a magnetic field for as many as 1200 revolutions, a new upper limit to the electric dipole moment has been determined. The value is

$$\mathrm{EDM} \leqslant (3 \pm 6) \cdot 10^{-5} \cdot \frac{e\hbar}{mc} \quad \text{or} \quad \mathrm{EDM} \leqslant e \cdot (0.6 \pm 1.1) \cdot 10^{-17}\ \mathrm{cm}\ ,$$

consistent with time-reversal invariance.

Slowly moving towards a storage ring for higher sensitivity

TDLI 李政道研究所 上海交通大学 SHANGHAI JIAO TONG UNIVERSITY

Pre-storage ring (CERN 1960)

Top View

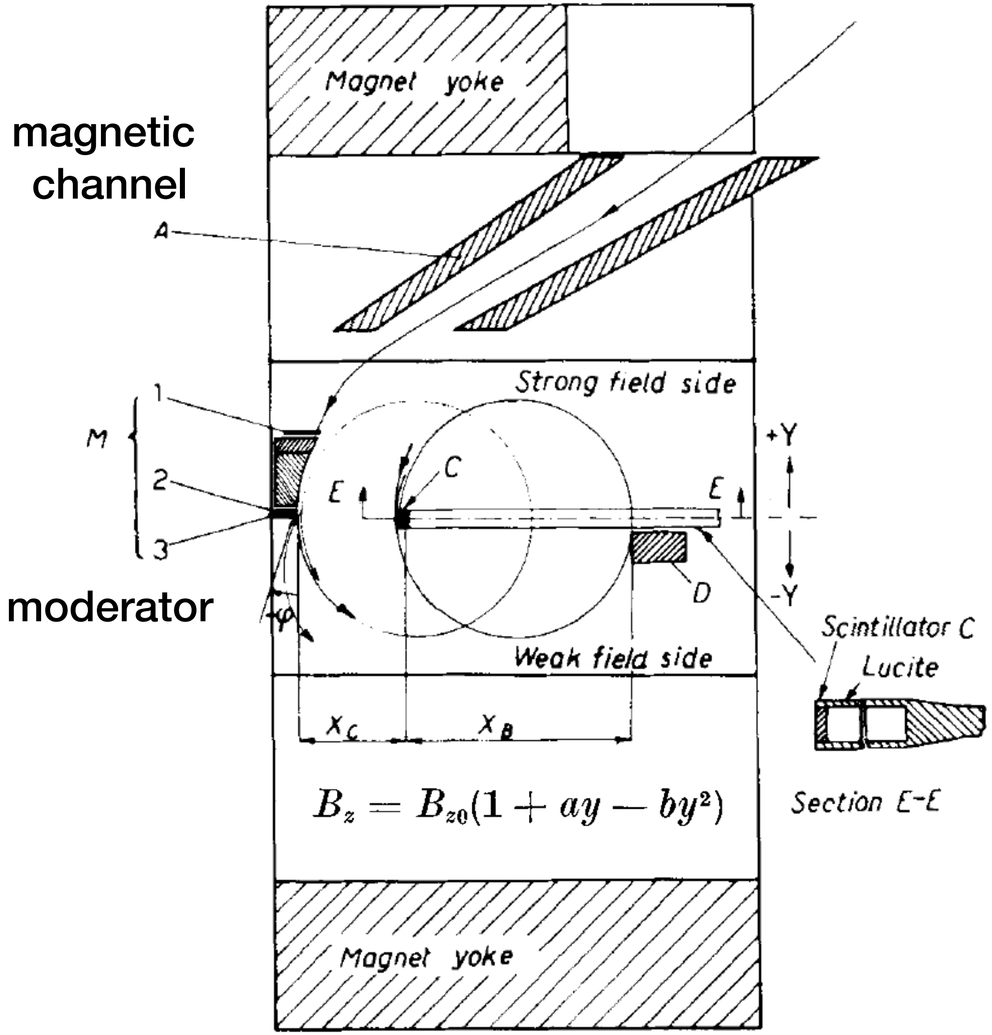

View towards M

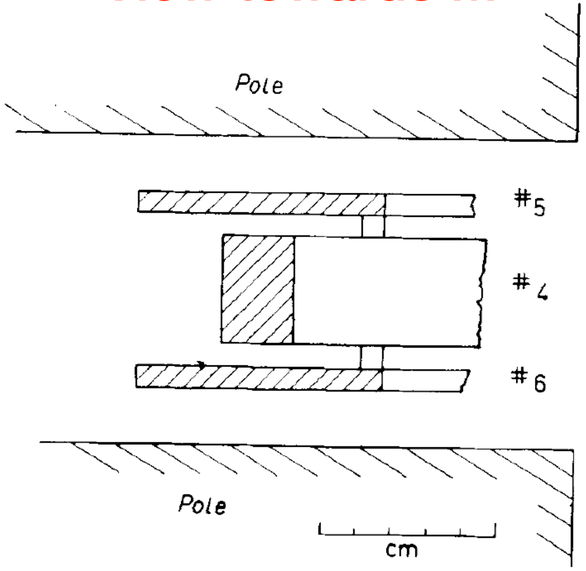

Fig. 4. – Counter layout for the measurement of the electric dipole moment.

$$a = \frac{N_{up} - N_{down}}{N_{up} + N_{down}}$$

EDM signal $\Theta_s = 2f\beta\gamma\Theta_0$

Orbit angle $\Theta_0 = \frac{eB}{mc\gamma}t$

$\Theta_0 < 2\pi$ Columbia

$\Theta_0 = 2n\pi, n \leq 28$ CERN

Compare many turns vs 1 turn

Pre-storage ring (CERN 1960)

TABLE I. – *Results obtained for particles which have made, in the mean 11.5, 16.5 and 19.5 turns (Group I, II and III respectively).* a_{early} refers to the asymmetry for muons, which have made, in the mean, one turn (ranging from $\frac{1}{2}$ to $\frac{3}{2}$ turns).

Group	Late turns	a_{early} (%)	a_{late} (%)	$a_{late} - a_{early}$ (%)	$\langle \Theta_{spin} \rangle$ (rad.)	$\langle \Theta_{orbit} \rangle$ (rad.)
I	$6\frac{1}{2} - 18\frac{1}{2}$	8.01 ± 0.84	6.98 ± 0.40	-1.04 ± 0.94	0.062 ± 0.047	66.0
II	$11\frac{1}{2} - 26\frac{1}{2}$	7.28 ± 1.81	7.04 ± 0.87	-0.24 ± 2.00	0.014 ± 0.100	97.0
III	$15\frac{1}{2} - 26\frac{1}{2}$	7.41 ± 1.24	7.19 ± 0.94	-0.22 ± 1.55	0.013 ± 0.080	116

1-turn result

Combining the 3 values of $\Theta_{spin}/\Theta_{orbit}$ which are listed in Table I, one finds:

$$f = (2.7 \pm 2.8) \cdot 10^{-4} .$$

This corresponds to an upper limit for the EDM of $e \cdot (5.0 \pm 5.0) \cdot 10^{-17}$ cm, and is consistent with time reversal invariance.

$$< \Theta_s > = \frac{a_{late} - a_{early}}{a_{max}}$$

$$< \Theta_0 > = \omega_c < t >$$

$$f = \frac{< \Theta_s >}{2\beta\gamma < \Theta_0 >}$$

Pre-storage ring (CERN 1961)

Upgraded polarimeter

Flip vertical component of the spin into forward or backward

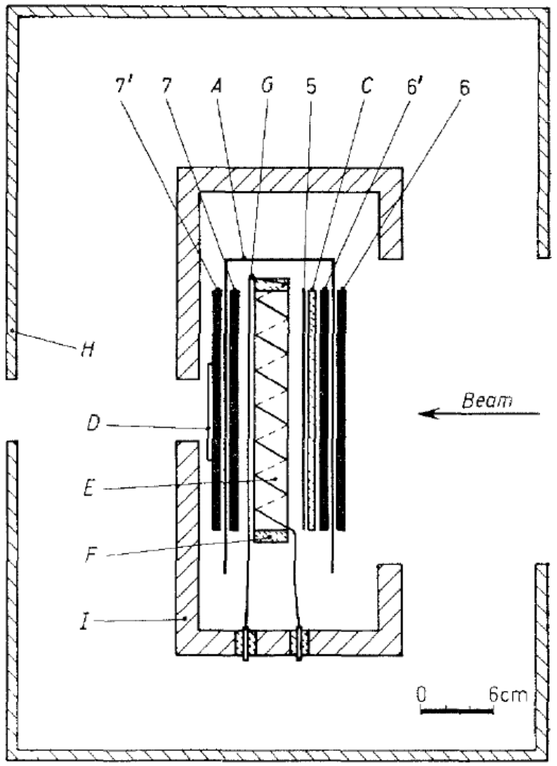

Fig. 2. – The polarization analyser (seen from above): *A*) mumetal shield; *C*) 6 mm lucite sheet; *D*) mirror; *E*) 3 cm thick CH_2I_2 target; *F*) lucite container; *G*) flipping coil; *H*) 1 cm Armco Iron shielding box; *I*) 2 cm Armco Iron shielding box.

$$A_n = (c_{n+} - c_{n-})/(c_{n+} + c_{n-}) = \frac{2\beta f \cdot A \sin \omega t}{(a^2 + 4f^2\beta^2)^{\frac{1}{2}}},$$

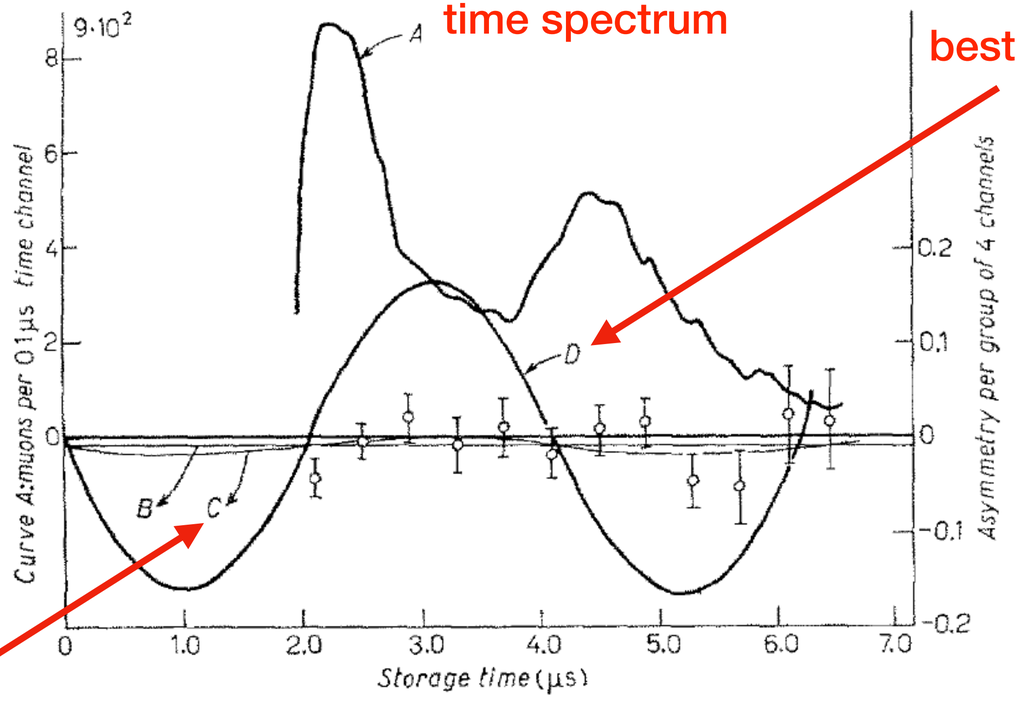

$$A_n = a_0 + a_1 \sin \omega t$$

$$f = (3 \pm 6) \times 10^{-5}$$

$$\text{EDM of muon} = e \cdot (0.6 \pm 1.1) \cdot 10^{-17} \text{ cm}.$$

Spin dynamics in a magnetic dipole storage ring

$$\vec{\omega}_s - \vec{\omega}_c = -\frac{e}{m}\left\{ a\vec{B} + \left(\frac{1}{\gamma^2 - 1} - a\right)\frac{\vec{\beta} \times \vec{E}}{c} + \frac{\eta}{2}\left(\frac{\vec{E}}{c} + \vec{\beta} \times \vec{B}\right) \right\}$$

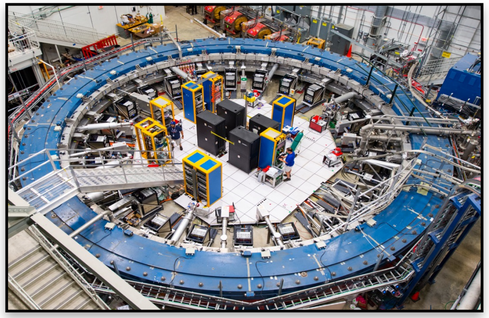

Spin dynamics in a magnetic dipole storage ring

$$\vec{\omega}_s - \vec{\omega}_c = -\frac{e}{m}\left\{ a\vec{B} + \left(\frac{1}{\gamma^2 - 1} - a\right)\frac{\vec{\beta}\times\vec{E}}{c} + \frac{\eta}{2}\left(\frac{\vec{E}}{c} + \vec{\beta}\times\vec{B}\right)\right\}$$

ω_a : AMM

ω_η: EDM

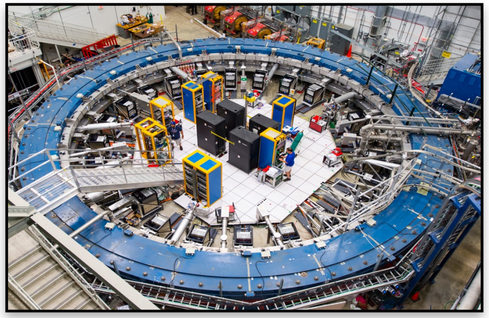

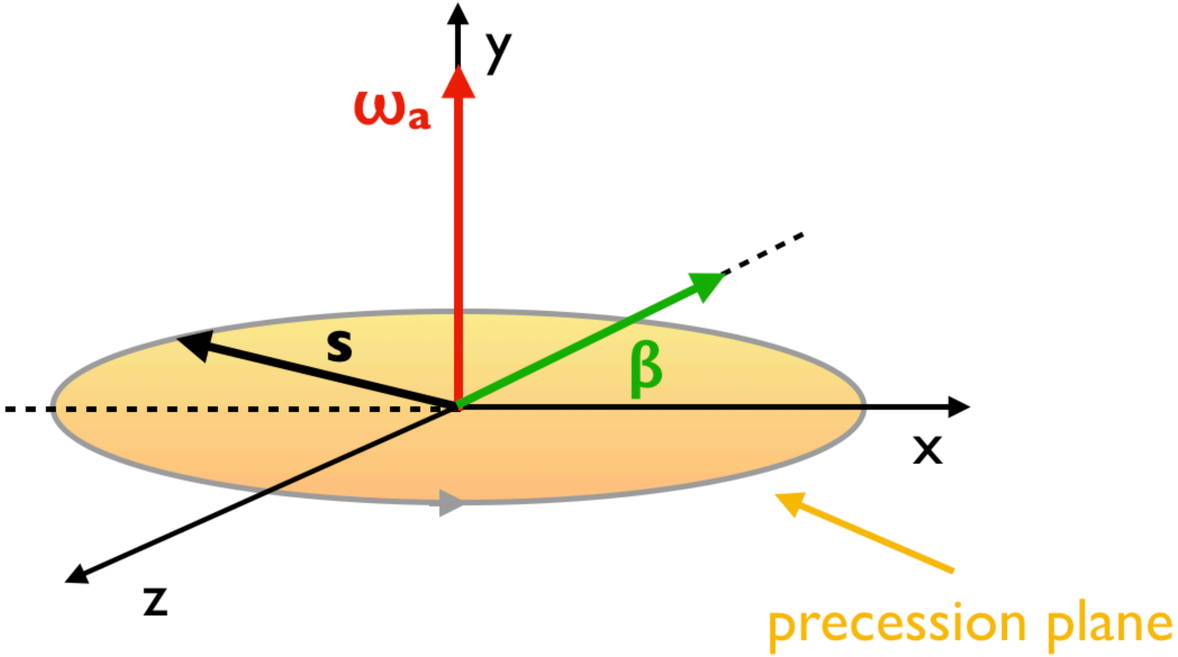

Spin dynamics in a magnetic dipole storage ring

$$\vec{\omega}_s - \vec{\omega}_c = -\frac{e}{m}\left\{ a\vec{B} + \left(\frac{1}{\gamma^2 - 1} - a\right)\frac{\vec{\beta}\times\vec{E}}{c} + \frac{\eta}{2}\left(\frac{\vec{E}}{c} + \vec{\beta}\times\vec{B}\right)\right\}$$

ω_a : AMM

ω_η: EDM

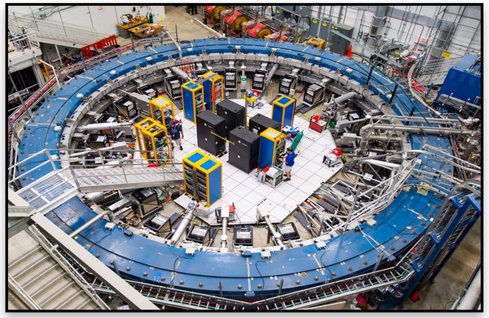

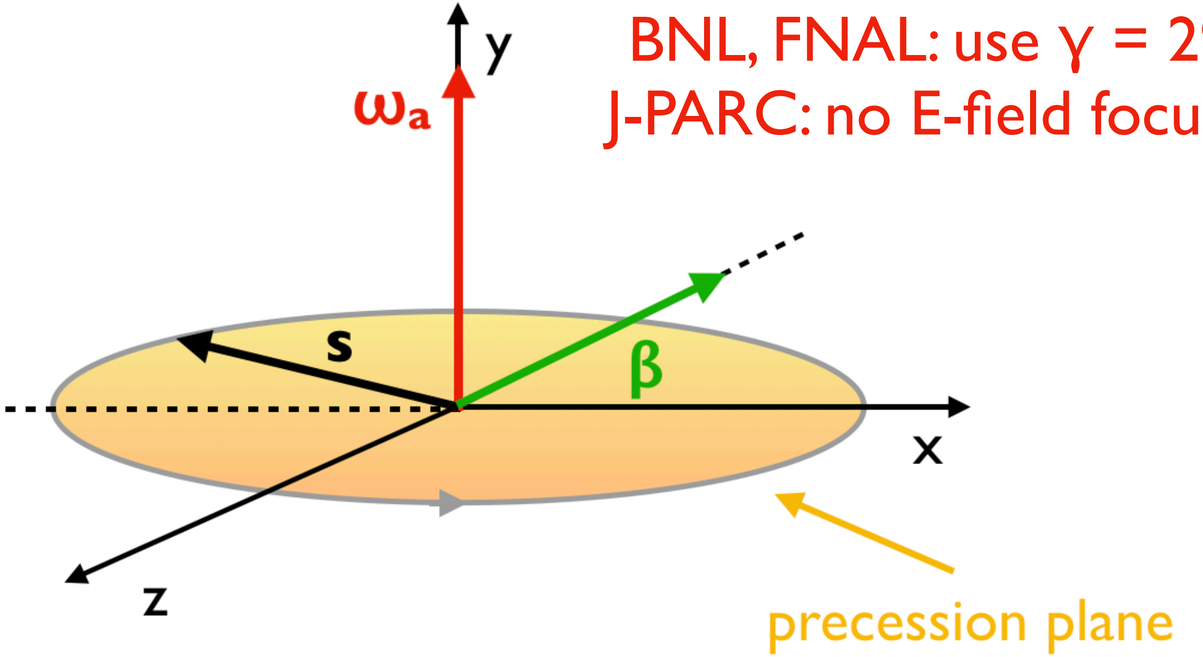

BNL, FNAL: use γ = 29.3

J-PARC: no E-field focusing

Spin dynamics in a magnetic dipole storage ring

$$\vec{\omega}_s - \vec{\omega}_c = -\frac{e}{m}\left\{ a\vec{B} + \left(\frac{1}{\gamma^2 - 1} - a\right)\frac{\vec{\beta}\times\vec{E}}{c} + \frac{\eta}{2}\left(\frac{\vec{E}}{c} + \vec{\beta}\times\vec{B}\right)\right\}$$

ω_a : AMM

ω_η: EDM

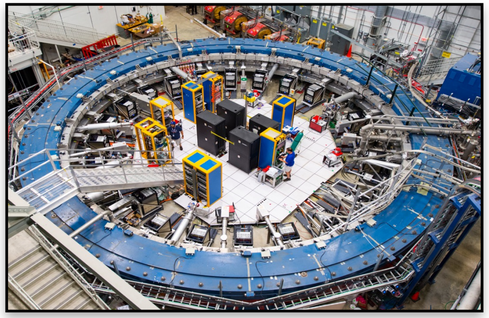

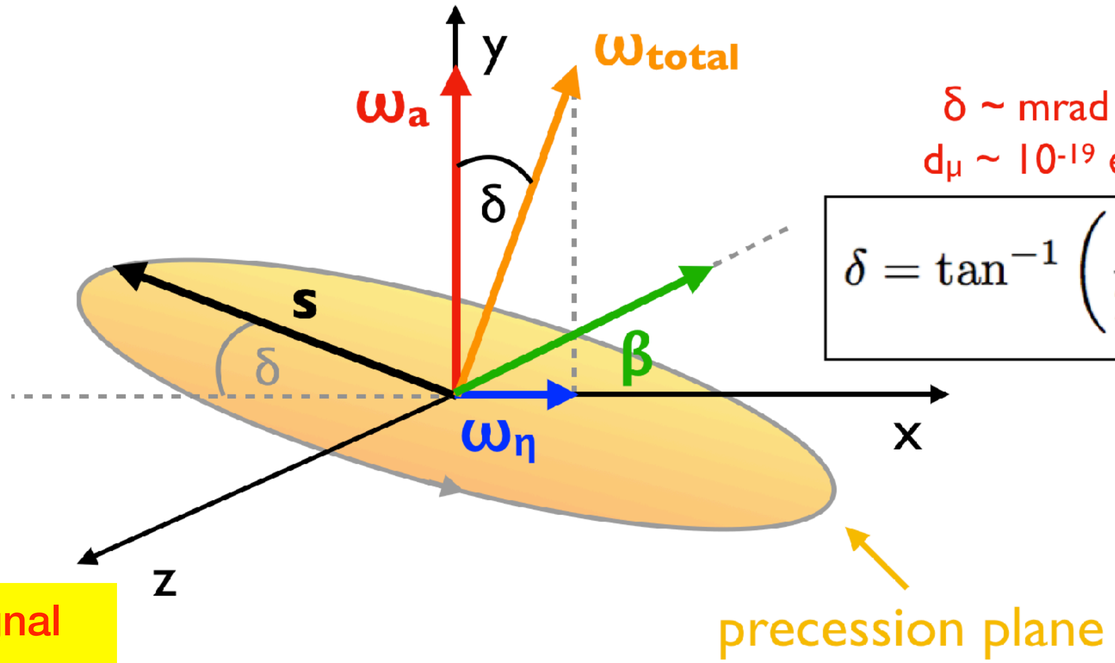

δ ~ mrad for
$d_\mu \sim 10^{-19}$ e cm

$$\delta = \tan^{-1}\left(\frac{\eta\beta}{2a_\mu}\right)$$

EDM signal 90 out of phase with g-2 signal

- g-2 max/min: s aligned/anti-aligned with p
- EDM max/min: s 90°/270° from p

Storage ring (parasitic with g-2, CERN 1975-76)

J. Phys. G: Nucl. Phys., Vol. 4, No. 3, 1978. Printed in Great Britain. © 1978

New limits on the electric dipole moment of positive and negative muons

J Bailey†, K Borer‡, F Combley§, H Drumm‖, F J M Farley¶, J H Field*, W Flegel*, P M Hattersley+, F Krienen*, F Lange‖, E Picasso* and W von Rüden‖

(CERN Muon Storage Ring Collaboration)

† Daresbury Laboratory, Warrington, UK
‡ Physikalishes Institut, Universität Bern, Bern, Switzerland
§ Department of Physics, University of Sheffield, Sheffield, UK
‖ Institut für Physik der Universität Mainz, Mainz, Germany
¶ Royal Military College of Science, Shrivenham, Wiltshire, UK
* European Organisation for Nuclear Research, CERN, Geneva, Switzerland
+ Department of Physics, University of Birmingham, Birmingham, UK

Received 9 August 1977

Abstract. New measurements of the electric dipole moment of muons of both charges have been made in the Muon Storage Ring at CERN. The values found are

$$D_{\mu^+} = (8{\cdot}6 \pm 4{\cdot}5) \times 10^{-19}\ e\,\mathrm{cm}$$

$$D_{\mu^-} = (0{\cdot}8 \pm 4{\cdot}3) \times 10^{-19}\ e\,\mathrm{cm}$$

(errors are of one standard deviation). We conclude, at 95% confidence level, that $|D_\mu| \leqslant 1{\cdot}05 \times 10^{-18}\ e\,\mathrm{cm}$.

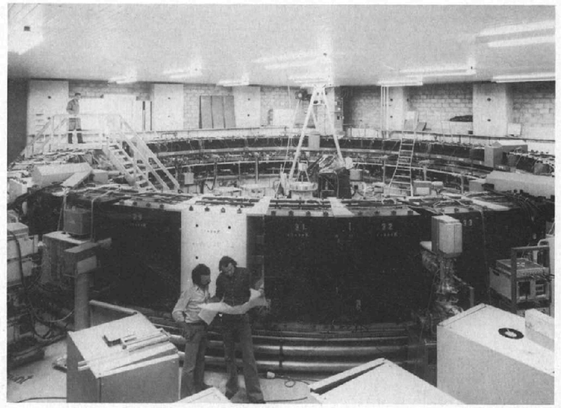

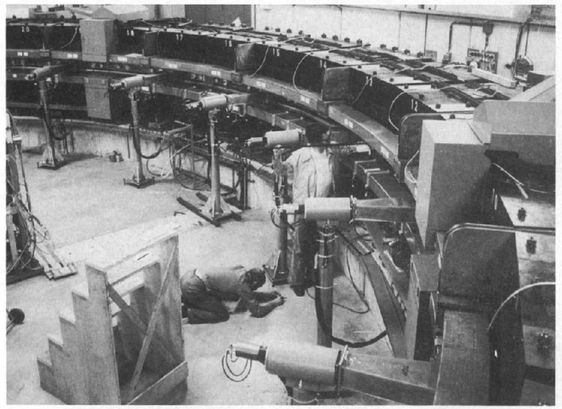

Storage ring (parasitic with g-2, CERN 1975-76)

J. Phys. G: Nucl. Phys., Vol. 4, No. 3, 1978. Printed in Great Britain. © 1978

New limits on the electric dipole moment of positive and negative muons

J Bailey†, K Borer‡, F Combley§, H Drumm‖, F J M Farley¶, J H Field*, W Flegel*, P M Hattersley⁺, F Krienen*, F Lange‖, E Picasso* and W von Rüden‖

(CERN Muon Storage Ring Collaboration)

† Daresbury Laboratory, Warrington, UK
‡ Physikalishes Institut, Universität Bern, Bern, Switzerland
§ Department of Physics, University of Sheffield, Sheffield, UK
‖ Institut für Physik der Universität Mainz, Mainz, Germany
¶ Royal Military College of Science, Shrivenham, Wiltshire, UK
* European Organisation for Nuclear Research, CERN, Geneva, Switzerland
⁺ Department of Physics, University of Birmingham, Birmingham, UK

Received 9 August 1977

Abstract. New measurements of the electric dipole moment of muons of both charges have been made in the Muon Storage Ring at CERN. The values found are

$$D_{\mu^+} = (8{\cdot}6 \pm 4{\cdot}5) \times 10^{-19}\, e\,\mathrm{cm}$$

$$D_{\mu^-} = (0{\cdot}8 \pm 4{\cdot}3) \times 10^{-19}\, e\,\mathrm{cm}$$

(errors are of one standard deviation). We conclude, at 95% confidence level, that $|D_\mu| \leqslant 1{\cdot}05 \times 10^{-18}\, e\,\mathrm{cm}$.

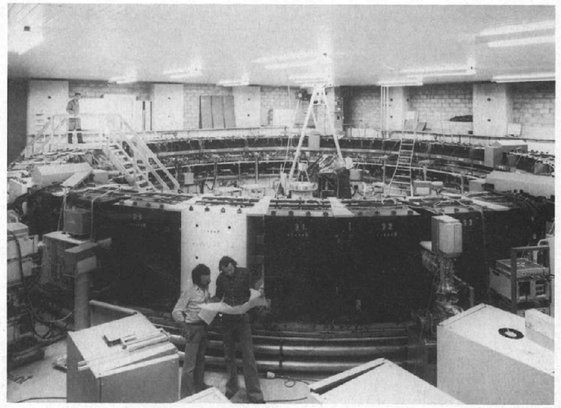

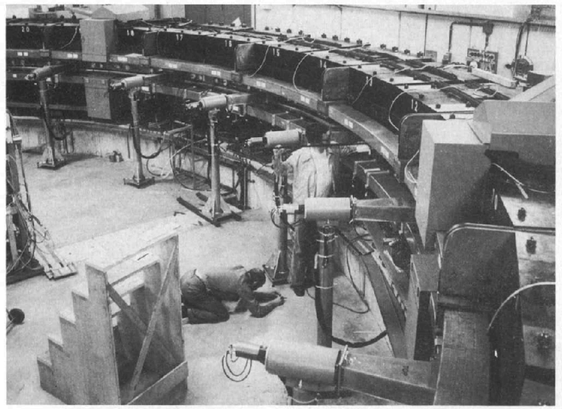

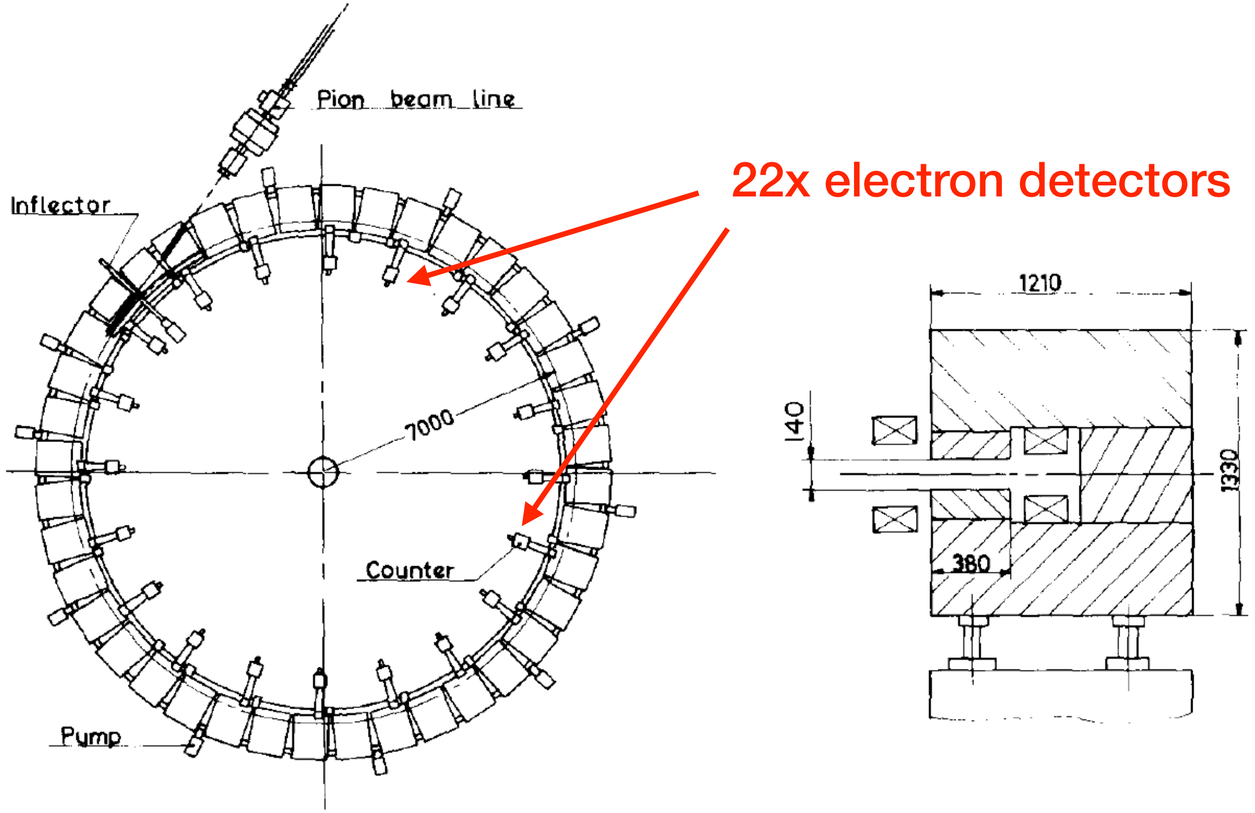

Fig. 1. Plan view of the muon storage ring and a cross section through one of the forty magnets. For most of the data taking 22 electron detectors were used. These were distributed around the ring at intervals which were as nearly uniform as possible.

B=1.47 T, Aperture=8 cm (V) x 12 cm (H), R=7 m, p=3.094 GeV/c, Quad coverage=72%, 24 kV

Storage ring (parasitic with g-2, CERN 1975-76)

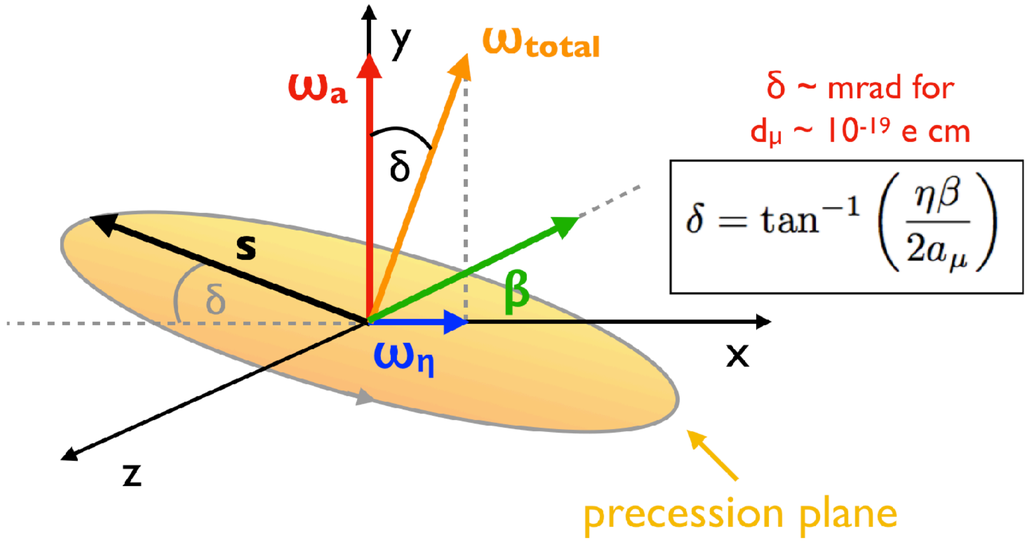

δ ~ mrad for
$d_\mu \sim 10^{-19}$ e cm

$$\delta = \tan^{-1}\left(\frac{\eta\beta}{2a_\mu}\right)$$

Oscillating vertical component of the spin causes up-down phase difference on electron detectors

$$N_{\rm up} = \tfrac{1}{2}Ne^{-t/\tau}(1 - A_\mu \cos(\omega t + \psi) + A_{\rm e}\sin(\omega t + \psi))$$

$$N_{\rm down} = \tfrac{1}{2}Ne^{-t/\tau}(1 - A_\mu \cos(\omega t + \psi) - A_{\rm e}\sin(\omega t + \psi)).$$

$$A_{\rm e} = (0{\cdot}164 \pm 0{\cdot}019)\delta$$ Simulation

Storage ring (parasitic with g-2, CERN 1975-76)

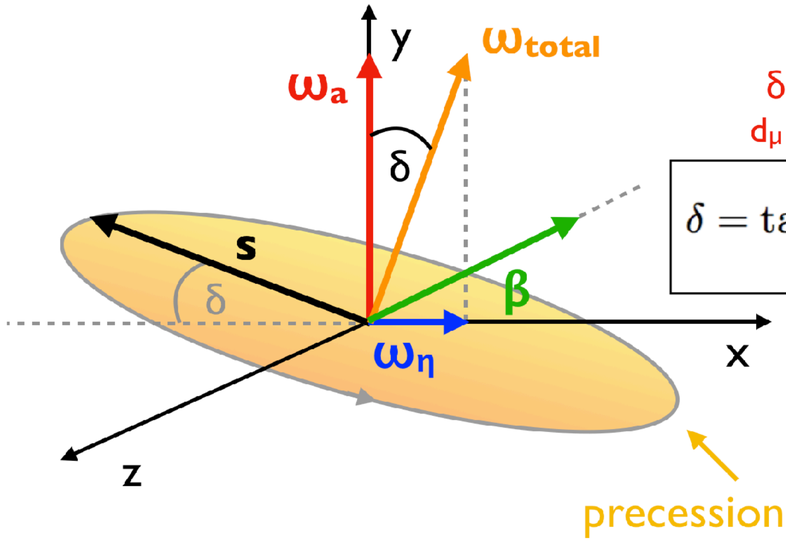

δ ~ mrad for
$d_\mu \sim 10^{-19}$ e cm

$$\delta = \tan^{-1}\left(\frac{\eta\beta}{2a_\mu}\right)$$

Oscillating vertical component of the spin causes up-down phase difference on electron detectors

$$N_{\rm up} = \tfrac{1}{2}Ne^{-t/\tau}(1 - A_\mu \cos(\omega t + \psi) + A_e \sin(\omega t + \psi))$$

$$N_{\rm down} = \tfrac{1}{2}Ne^{-t/\tau}(1 - A_\mu \cos(\omega t + \psi) - A_e \sin(\omega t + \psi)).$$

$$A_e = (0{\cdot}164 \pm 0{\cdot}019)\delta$$ Simulation

Table 1. Summary of runs.

Run	Sign	No of stops (million)	$\Delta\phi = \phi_{\rm up} - \phi_{\rm down}$ (mrad)	Dipole moment[a] (e cm × 10^{19})
1975 A	μ^+	1·1	−14·9 (17·1)	7·7 (8·8)[b]
B	μ^-	1·9	−2·6 (13·2)	−1·3 (6·8)
1976 A	μ^+	2·1	−27·0 (11·5)	14·9 (6·3)
B	μ^-	0·8	+1·6 (18·8)	0·9 (10·3)
C	μ^-	1·5	+1·9 (13·6)	1·0 (7·4)
D	μ^+	2·2	−6·3 (11·8)	3·3 (6·1)
E	μ^-	1·8	+5·5 (13·4)	2·8 (6·9)
Weighted averages	μ^+	5·4	−16·5 (7·4)	8·6 (4·0)
	μ^-	6·0	+1·6 (7·2)	0·8 (3·8)
	$(\mu^+ + \mu^-)$ overall	11·4	−7·2 (5·2)	3·7 (2·7)[c]

$$D_{\mu^+} = (8{\cdot}6 \pm 4{\cdot}5) \times 10^{-19}\ e\,\text{cm}$$

$$D_{\mu^-} = (0{\cdot}8 \pm 4{\cdot}3) \times 10^{-19}\ e\,\text{cm}.$$

Assuming the CPT theorem they can be combined to give for the muon

$$D_\mu = (3{\cdot}7 \pm 3{\cdot}4) \times 10^{-19}\ e\,\text{cm}.$$

Storage ring (parasitic with g-2, BNL 1999-2001)

PHYSICAL REVIEW D **80,** 052008 (2009)

Improved limit on the muon electric dipole moment

G. W. Bennett,[2] B. Bousquet,[10] H. N. Brown,[2] G. Bunce,[2] R. M. Carey,[1] P. Cushman,[10] G. T. Danby,[2] P. T. Debevec,[8] M. Deile,[13] H. Deng,[13] W. Deninger,[8] S. K. Dhawan,[13] V. P. Druzhinin,[3] L. Duong,[10] E. Efstathiadis,[1] F. J. M. Farley,[13] G. V. Fedotovich,[3] S. Giron,[10] F. E. Gray,[8] D. Grigoriev,[3] M. Grosse-Perdekamp,[13] A. Grossmann,[7] M. F. Hare,[1] D. W. Hertzog,[8] X. Huang,[1] V. W. Hughes,[13,*] M. Iwasaki,[12] K. Jungmann,[6] D. Kawall,[13] M. Kawamura,[12] B. I. Khazin,[3] J. Kindem,[10] F. Krienen,[1,*] I. Kronkvist,[10] A. Lam,[1] R. Larsen,[2] Y. Y. Lee,[2] I. Logashenko,[1,3] R. McNabb,[10,8] W. Meng,[2] J. Mi,[2] J. P. Miller,[1] Y. Mizumachi,[11] W. M. Morse,[2] D. Nikas,[2] C. J. G. Onderwater,[8,6] Y. Orlov,[4] C. S. Özben,[2,8] J. M. Paley,[1] Q. Peng,[1] C. C. Polly,[8] J. Pretz,[13] R. Prigl,[2] G. zu Putlitz,[7] T. Qian,[10] S. I. Redin,[3,13] O. Rind,[1] B. L. Roberts,[1] N. Ryskulov,[3] S. Sedykh,[8] Y. K. Semertzidis,[2] P. Shagin,[10] Yu. M. Shatunov,[3] E. P. Sichtermann,[13] E. Solodov,[3] M. Sossong,[8] A. Steinmetz,[13] L. R. Sulak,[1] C. Timmermans,[10] A. Trofimov,[1] D. Urner,[8] P. von Walter,[7] D. Warburton,[2] D. Winn,[5] A. Yamamoto,[9] and D. Zimmerman[10]

(Muon ($g-2$) Collaboration)

Three independent searches for an electric dipole moment (EDM) of the positive and negative muons have been performed, using spin precession data from the muon $g-2$ storage ring at Brookhaven National Laboratory. Details on the experimental apparatus and the three analyses are presented. Since the individual results on the positive and negative muons, as well as the combined result, $d_\mu = (0.0 \pm 0.9) \times 10^{-19} e\,\mathrm{cm}$, are all consistent with zero, we set a new muon EDM limit, $|d_\mu| < 1.8 \times 10^{-19} e\,\mathrm{cm}$ (95% C.L.). This represents a factor of 5 improvement over the previous best limit on the muon EDM.

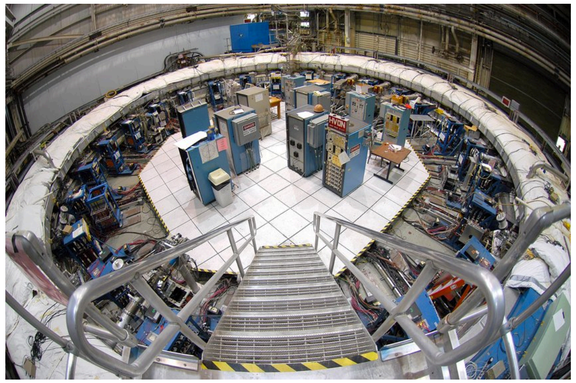

Storage ring (parasitic with g-2, BNL 1999-2001)

PHYSICAL REVIEW D **80**, 052008 (2009)

Improved limit on the muon electric dipole moment

G. W. Bennett,[2] B. Bousquet,[10] H. N. Brown,[2] G. Bunce,[2] R. M. Carey,[1] P. Cushman,[10] G. T. Danby,[2] P. T. Debevec,[8] M. Deile,[13] H. Deng,[13] W. Deninger,[8] S. K. Dhawan,[13] V. P. Druzhinin,[3] L. Duong,[10] E. Efstathiadis,[1] F. J. M. Farley,[13] G. V. Fedotovich,[3] S. Giron,[10] F. E. Gray,[8] D. Grigoriev,[3] M. Grosse-Perdekamp,[13] A. Grossmann,[7] M. F. Hare,[1] D. W. Hertzog,[8] X. Huang,[1] V. W. Hughes,[13,*] M. Iwasaki,[12] K. Jungmann,[6] D. Kawall,[13] M. Kawamura,[12] B. I. Khazin,[3] J. Kindem,[10] F. Krienen,[1,*] I. Kronkvist,[10] A. Lam,[1] R. Larsen,[2] Y. Y. Lee,[2] I. Logashenko,[1,3] R. McNabb,[10,8] W. Meng,[2] J. Mi,[2] J. P. Miller,[1] Y. Mizumachi,[11] W. M. Morse,[2] D. Nikas,[2] C. J. G. Onderwater,[8,6] Y. Orlov,[4] C. S. Özben,[2,8] J. M. Paley,[1] Q. Peng,[1] C. C. Polly,[8] J. Pretz,[13] R. Prigl,[2] G. zu Putlitz,[7] T. Qian,[10] S. I. Redin,[3,13] O. Rind,[1] B. L. Roberts,[1] N. Ryskulov,[3] S. Sedykh,[8] Y. K. Semertzidis,[2] P. Shagin,[10] Yu. M. Shatunov,[3] E. P. Sichtermann,[13] E. Solodov,[3] M. Sossong,[8] A. Steinmetz,[13] L. R. Sulak,[1] C. Timmermans,[10] A. Trofimov,[1] D. Urner,[8] P. von Walter,[7] D. Warburton,[2] D. Winn,[5] A. Yamamoto,[9] and D. Zimmerman[10]

(Muon $(g-2)$ Collaboration)

Three independent searches for an electric dipole moment (EDM) of the positive and negative muons have been performed, using spin precession data from the muon $g-2$ storage ring at Brookhaven National Laboratory. Details on the experimental apparatus and the three analyses are presented. Since the individual results on the positive and negative muons, as well as the combined result, $d_\mu = (0.0 \pm 0.9) \times 10^{-19} e\,\mathrm{cm}$, are all consistent with zero, we set a new muon EDM limit, $|d_\mu| < 1.8 \times 10^{-19} e\,\mathrm{cm}$ (95% C.L.). This represents a factor of 5 improvement over the previous best limit on the muon EDM.

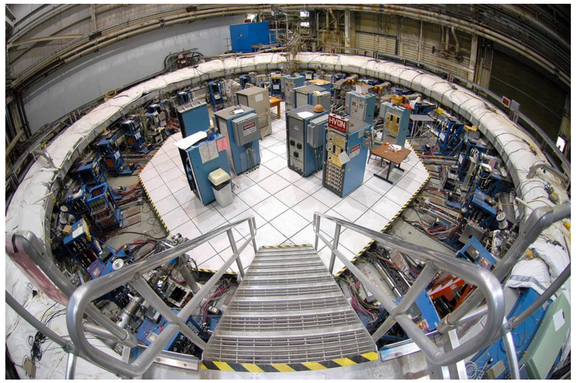

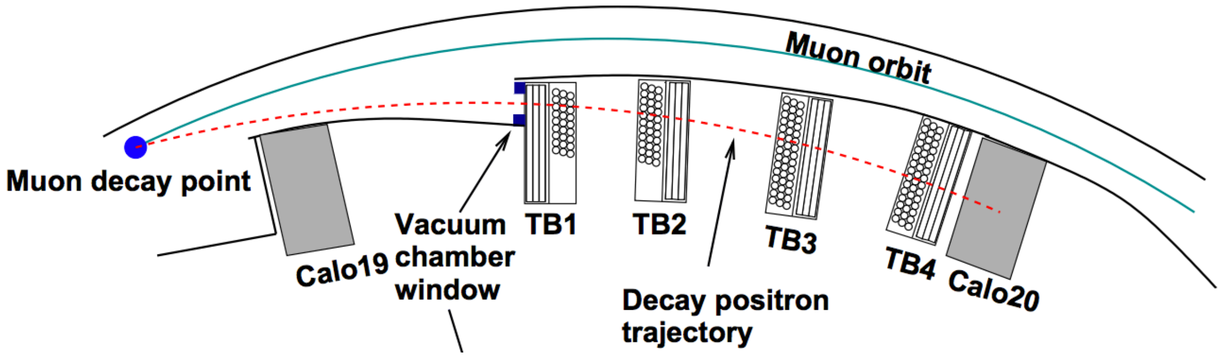

Tracker-based measurement
[vertical angle oscillation]

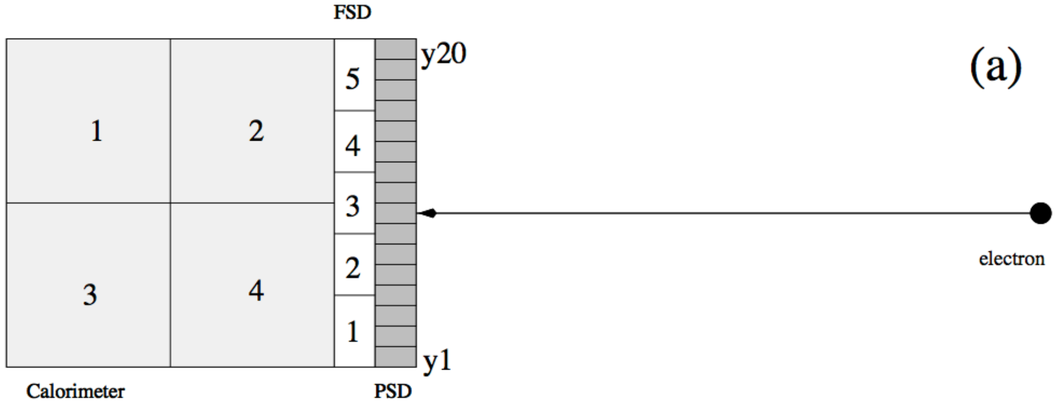

PSD+Calorimeter-based measurements
[vertical position oscillation, up-down phase difference]

Storage ring (parasitic with g-2, BNL 1999-2001)

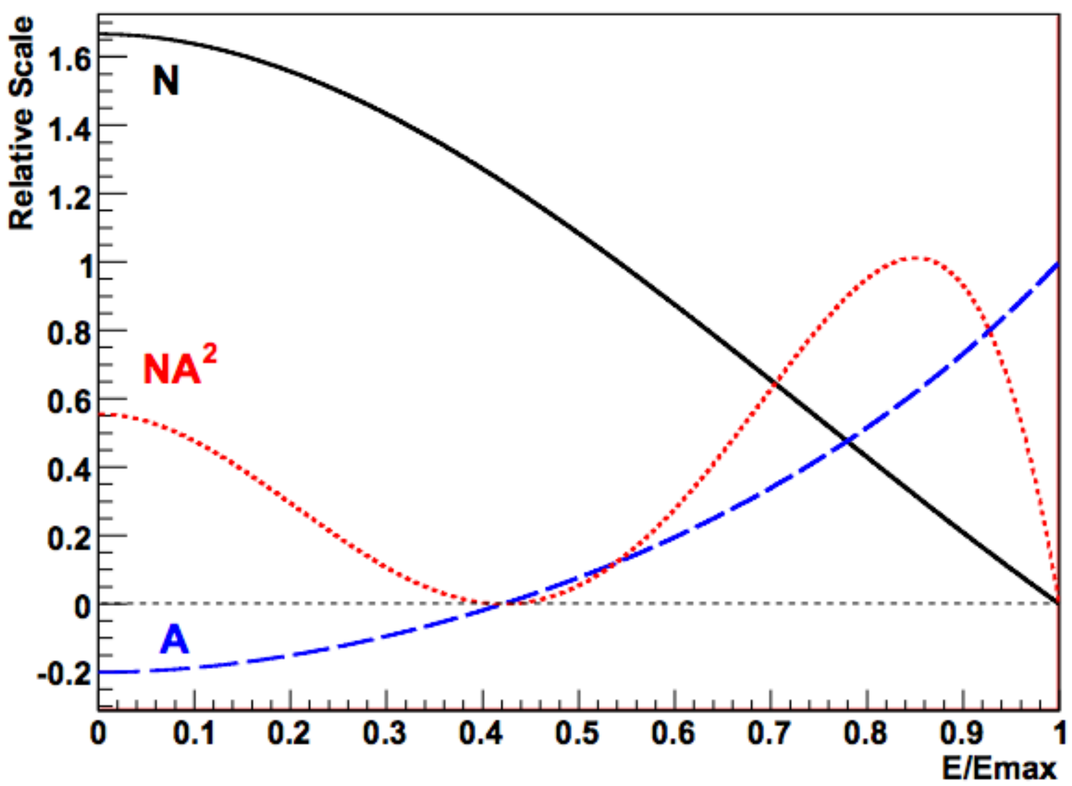

g-2 analysis prefers high-energy positrons (> 1.7 GeV)

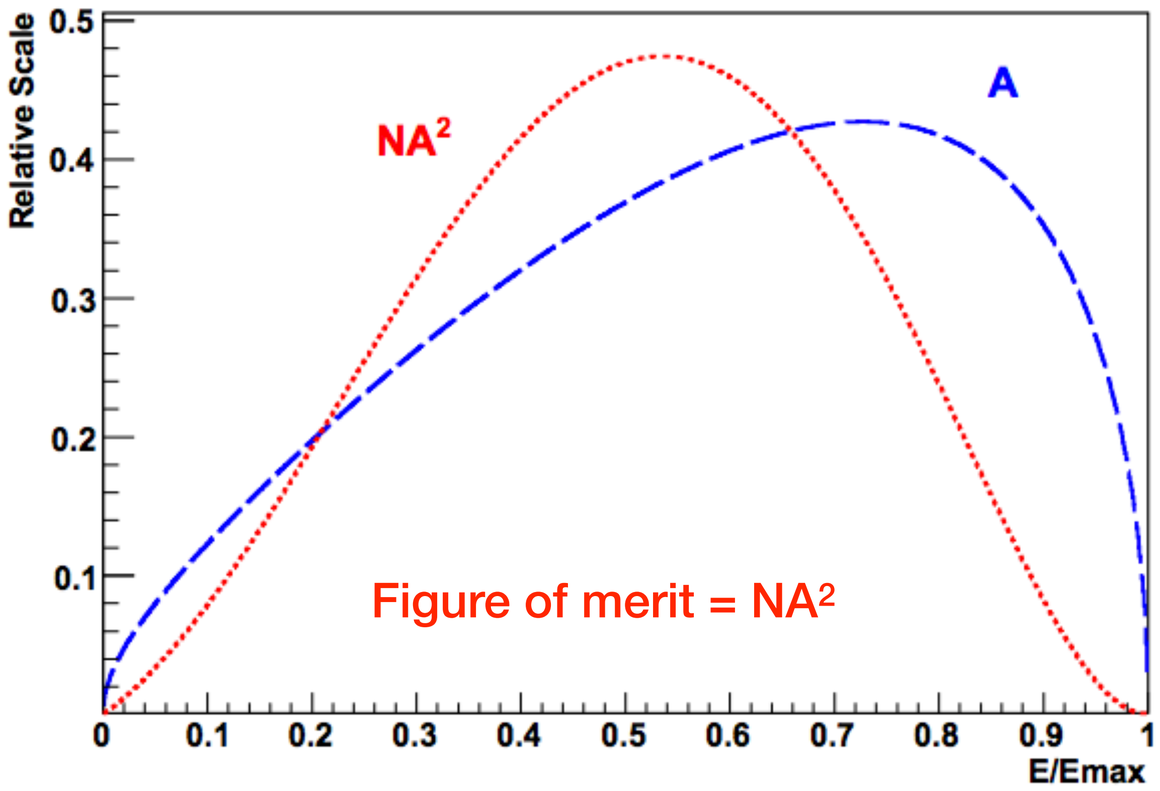

EDM analysis prefers mid-energy positrons

Vertical Angle Oscillation

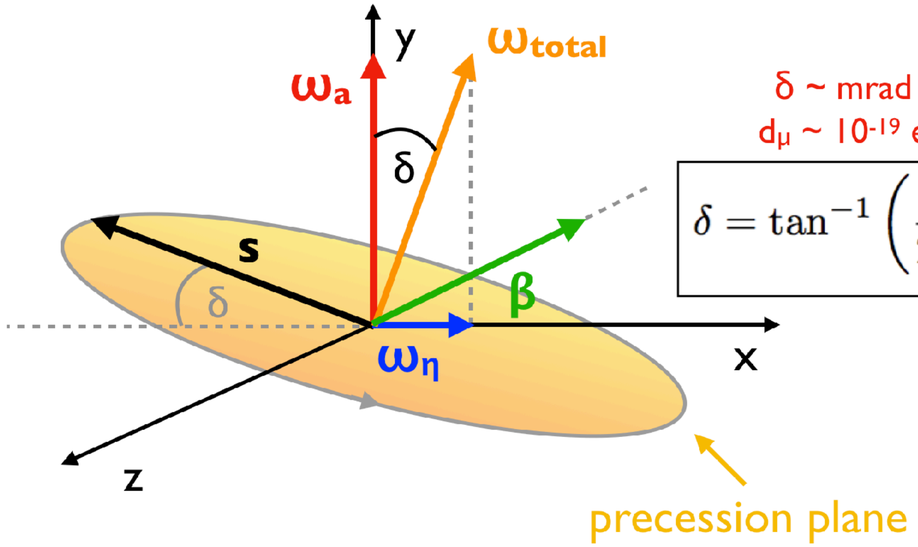

δ ~ mrad for
$d_\mu \sim 10^{-19}$ e cm

$$\delta = \tan^{-1}\left(\frac{\eta\beta}{2a_\mu}\right)$$

EDM signal 90 out of phase with g-2 signal

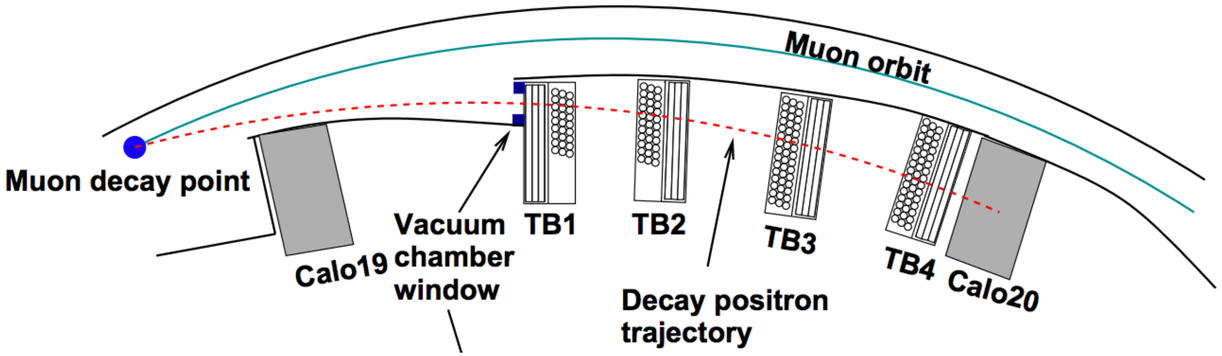

1. Fit for g-2 phase

$$N(t) = e^{-t/\tau_e}(N_0 + W\cos(\omega t + \Phi)),$$

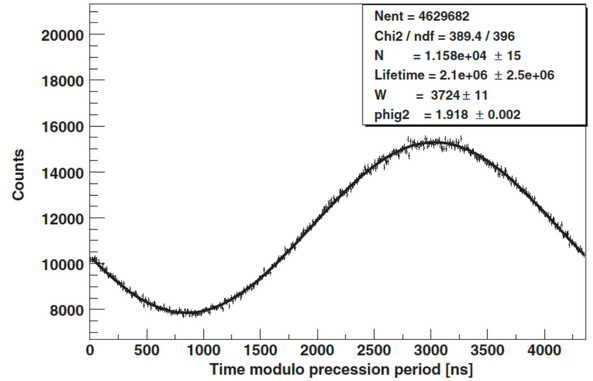

2. Fix g-2 phase and fit for A_{EDM}

$$\theta(t) = M + A_\mu\cos(\omega t + \Phi) + A_{\mathrm{EDM}}\sin(\omega t + \Phi),$$

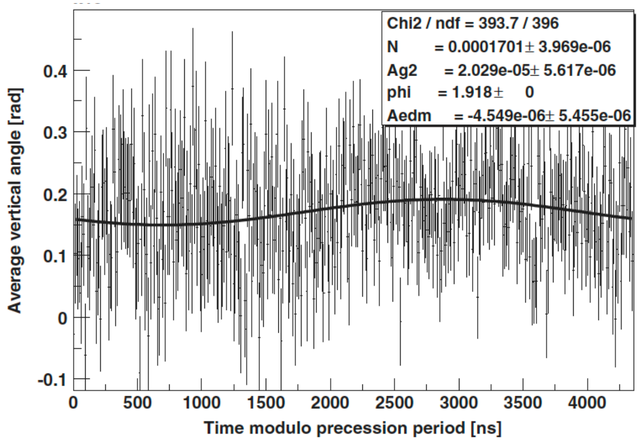

Vertical Position Oscillation

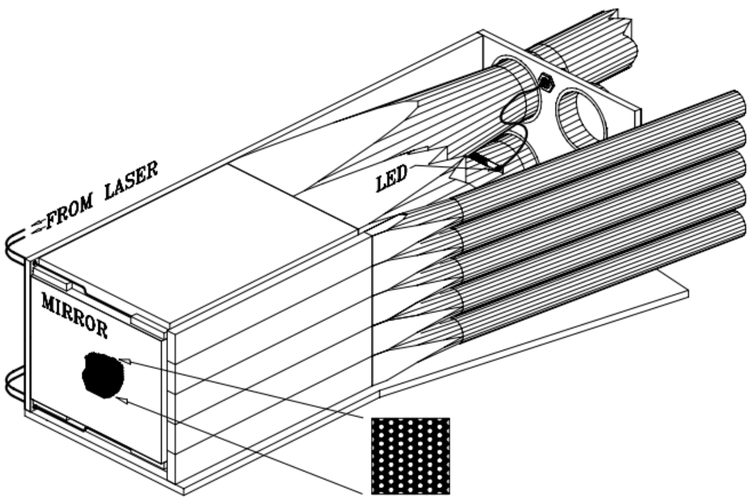

Vertical hit distribution seen by calorimeters

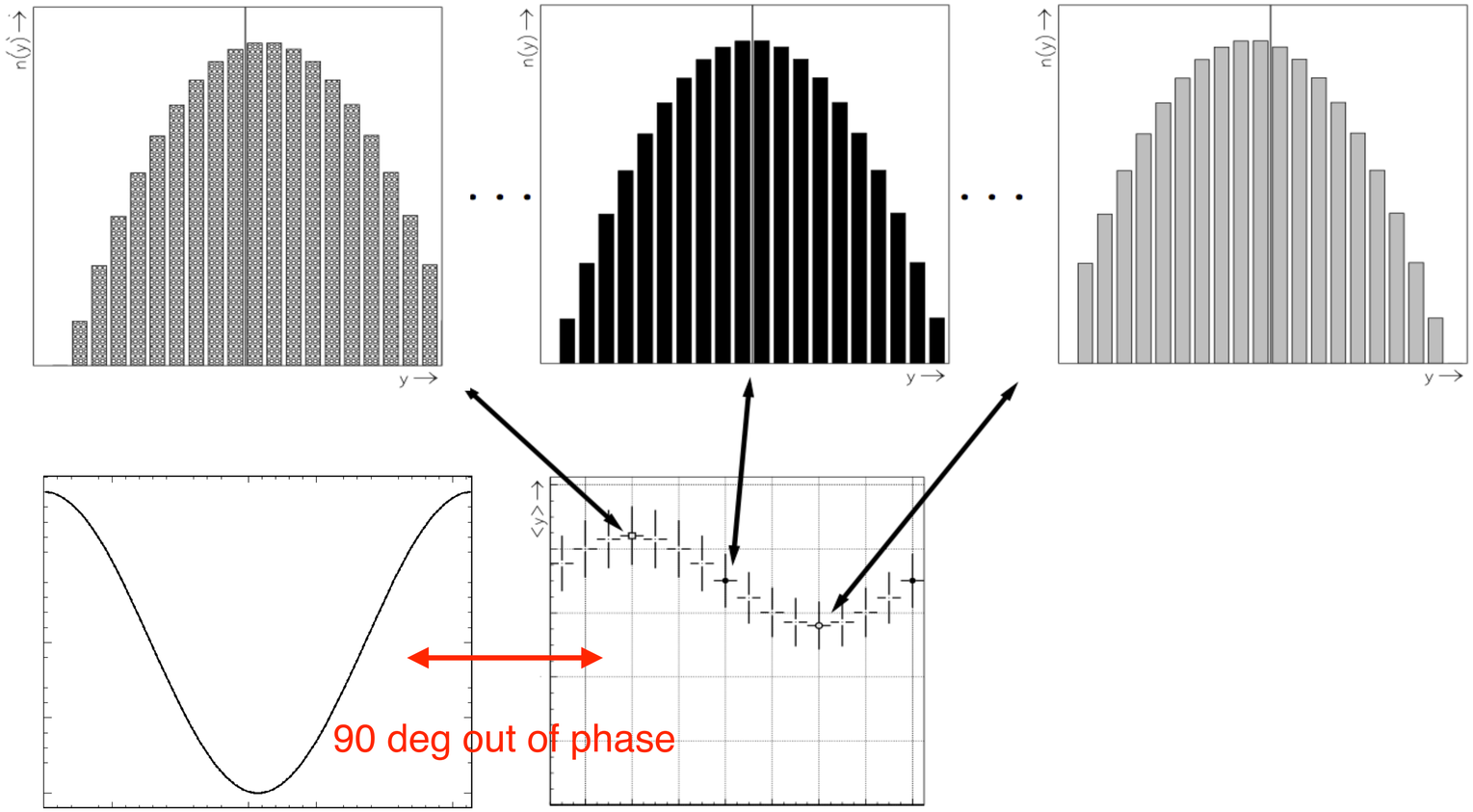

Positron count versus (g-2) phase

Mean vertical position versus (g-2) phase

Giron, PhD Thesis (2004)

Vertical Phase Gradient

Giron, PhD Thesis (2004)

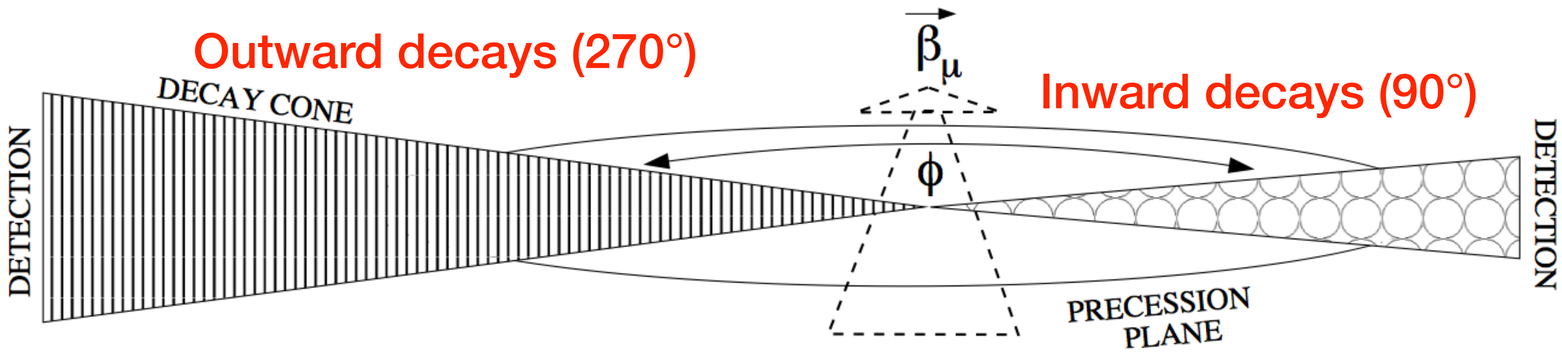

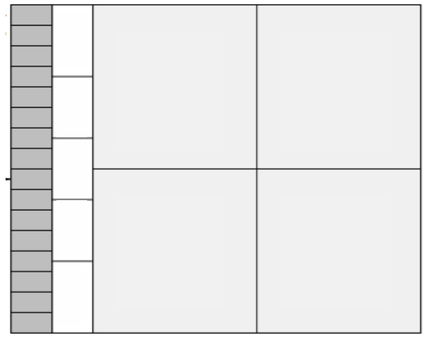

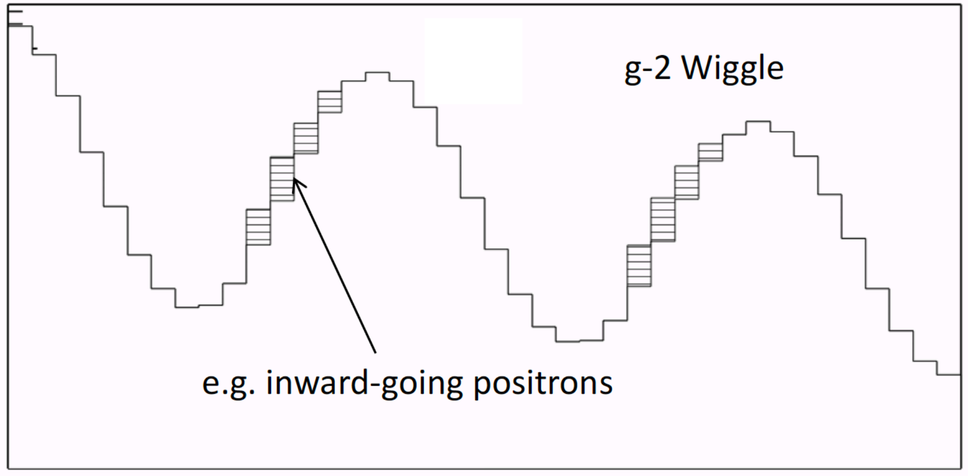

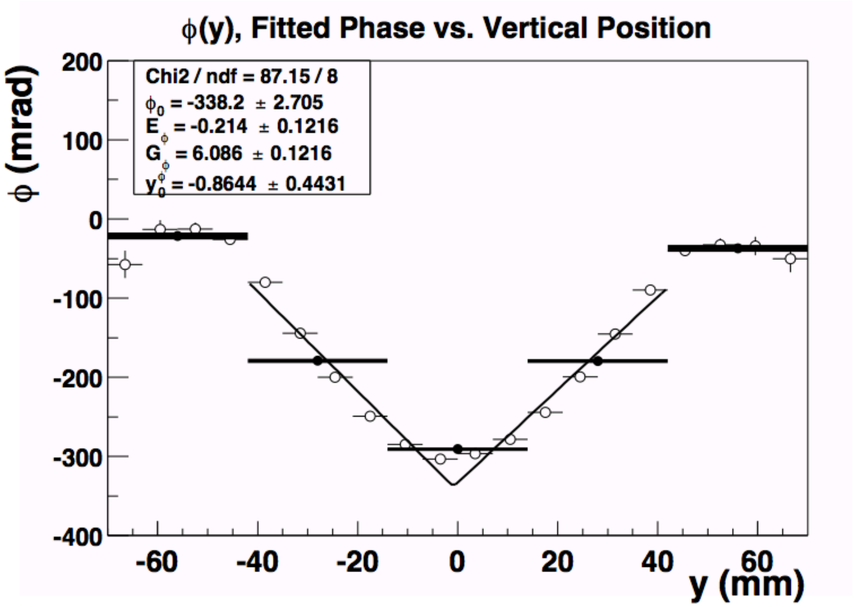

Midplane symmetry

Vertical Phase Gradient

Giron, PhD Thesis (2004)

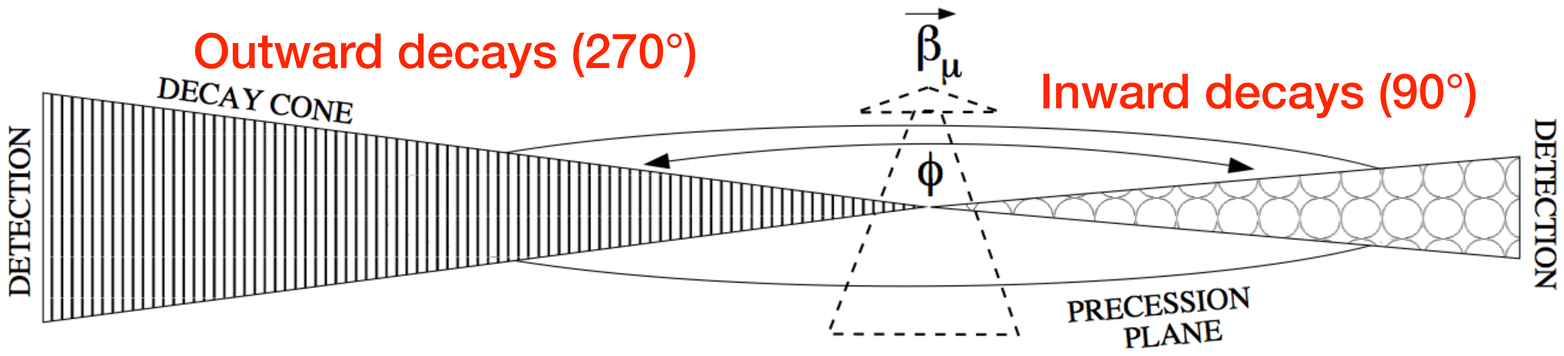

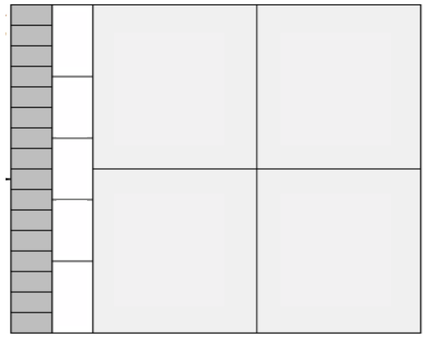

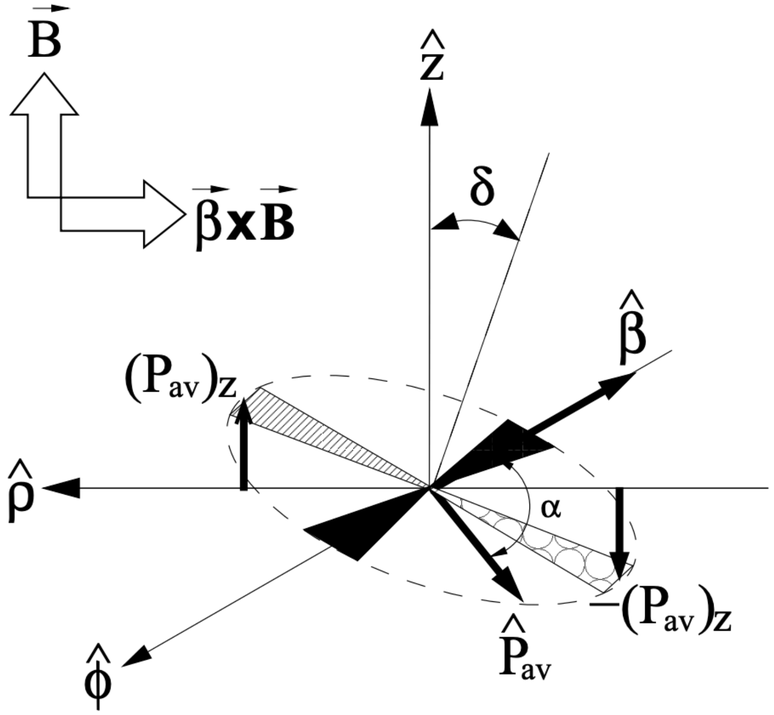

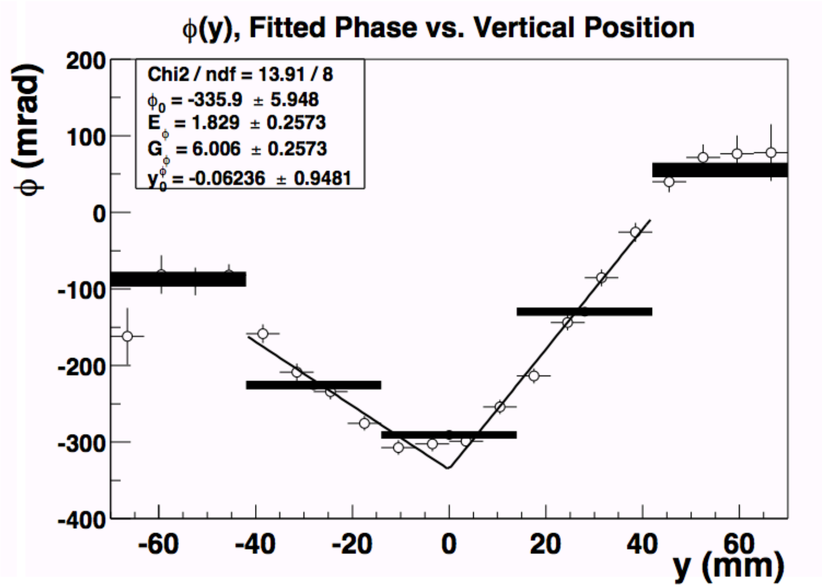

Midplane asymmetry

Storage ring (parasitic with g-2, BNL 1999-2001)

Analysis	Mean value	Stat. error	Syst. error	Total error	95% C.L.
CERN (1978)					
(μ^+)	8.6	4.0	2.0	4.5	
(μ^-)	0.8	3.8	2.0	4.3	
Combined $\mu^+\mu^-$	−3.7	2.8	2.0	3.4	10.5
E821					
Traceback (μ^+)	0.0	1.6	0.1	1.6	
FSD (μ^+)	−0.1	0.7	1.2	1.4	
Average μ^+	−0.1	0.6	0.8	1.0	
PSD (μ^-)	−0.1	0.3	0.7	0.7	
Combined $\mu^+\mu^-$	0.0	0.2	0.9	0.9	1.8

$$d_\mu = (0.0 \pm 0.9) \times 10^{-19}\ e\,\mathrm{cm}.$$

This corresponds to the limit

$$|d_\mu| \leq 1.8 \times 10^{-19}\ e\,\mathrm{cm}\ (95\%\ \mathrm{C.L.}),$$

Storage ring (parasitic with g-2, FNAL 2019-2022)

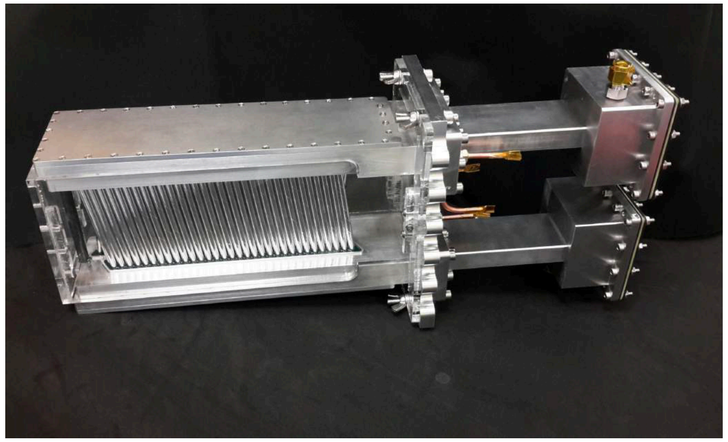

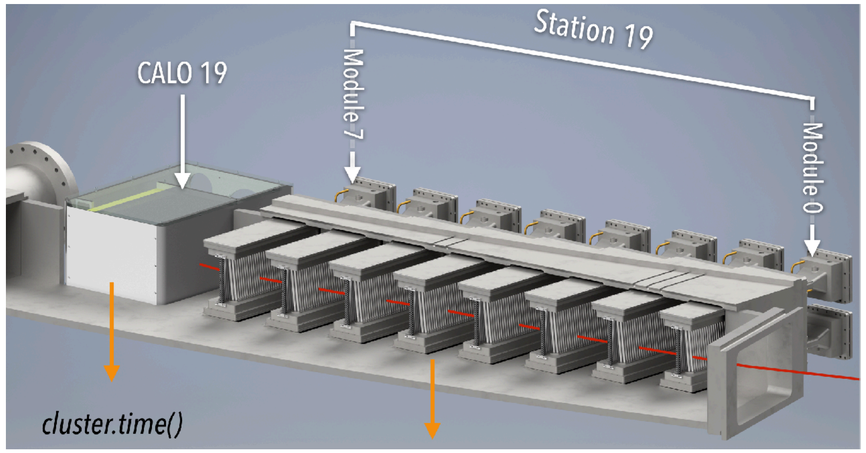

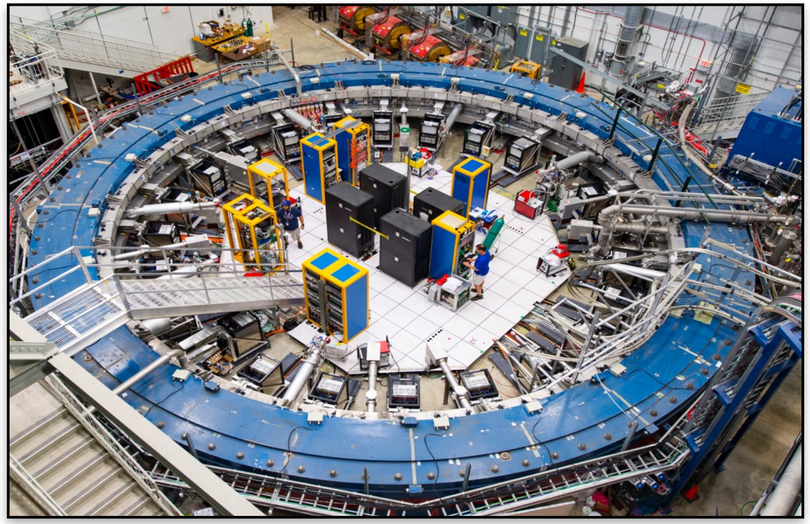

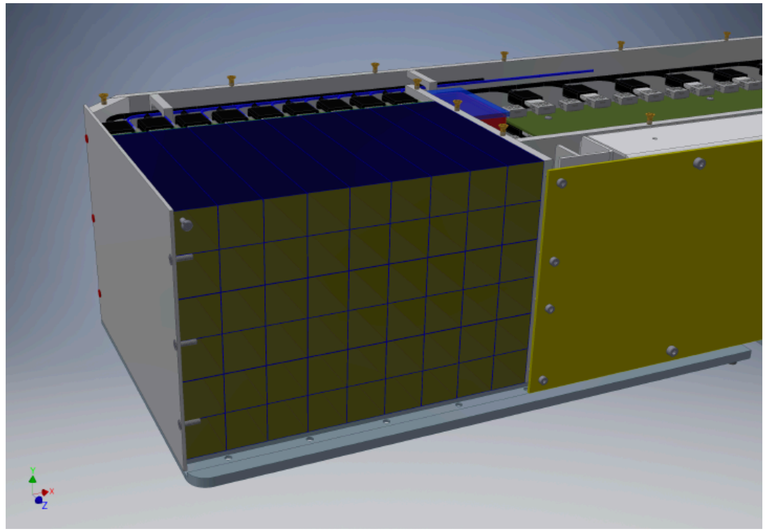

J. Price
Feb 18, 9 am

3 ways to search for a muon EDM

1. Vertical Angle Oscillation (Tracker)
2. Vertical Position Oscillation (Calorimeter)
3. Vertical Phase Gradient (Calorimeter)

Storage ring (parasitic with g-2, J-PARC 2024-2026)

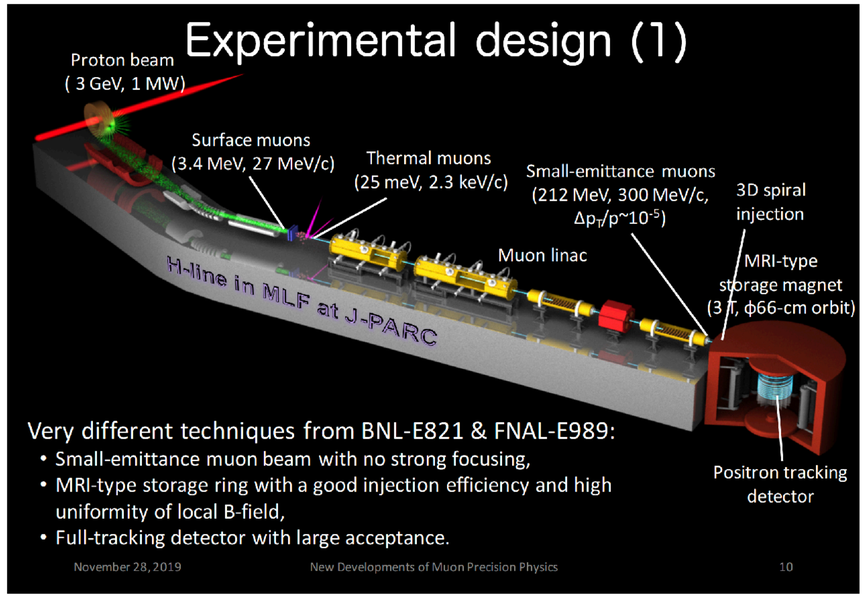

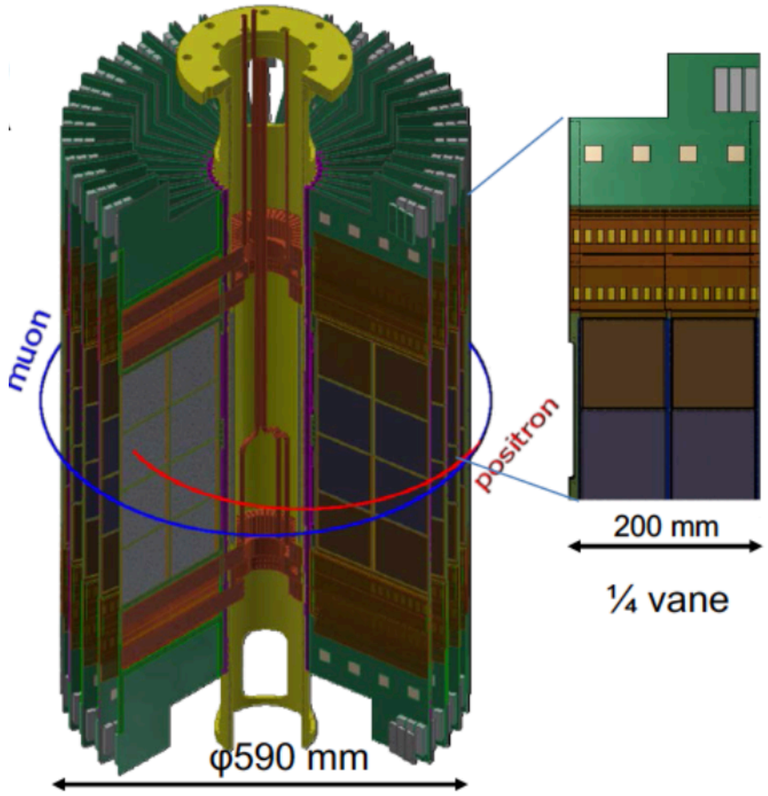

T. Mibe
Feb 18, 9:40 am

Search for a muon EDM

Vertical Angle Oscillation (Tracker)

Spin dynamics in a magnetic dipole storage ring

$$\vec{\omega}_s - \vec{\omega}_c = -\frac{e}{m}\left\{ a\vec{B} + \left(\frac{1}{\gamma^2-1} - a\right)\frac{\vec{\beta}\times\vec{E}}{c} + \frac{\eta}{2}\left(\frac{\vec{E}}{c} + \vec{\beta}\times\vec{B}\right)\right\}$$

ω_a : AMM

ω_η: EDM

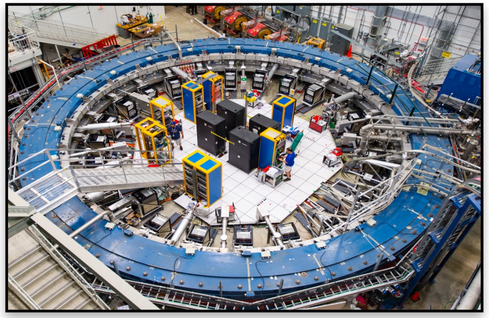

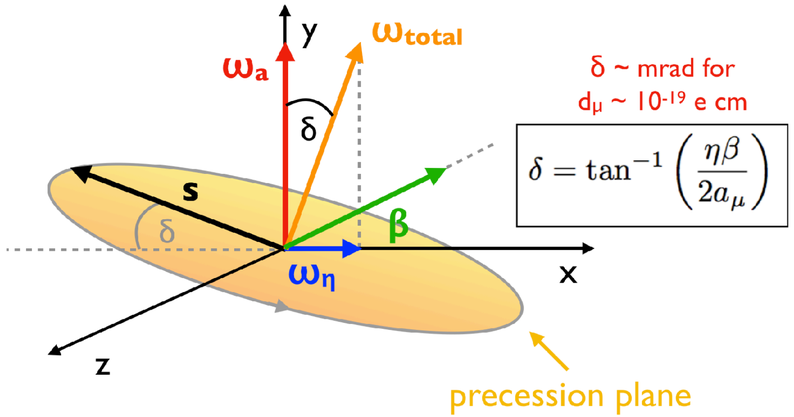

4 Conclusions

Some popular "non-standard" models of CP violation predict that the muon EDM is not very much bigger than about a few $\times 100 d_e$. A substantially larger d_μ is possible in specific versions of left-right symmetric models and leptoquark models. However, if d_μ is of order 10^{-19} – $10^{-20} e\ cm$, one would expect even larger electric and weak dipole form factors of the τ which should eventually be measurable at LEP. Nevertheless, future experimental determinations of d_μ will be of interest. It seems also worthwhile to search for experimental methods which would substantially increase the sensitivity to this form factor.

W. Bernreuther, Z. Phys. C 56 (1992) S97

Frozen-spin technique for EDM search

$$\vec{\omega}_s - \vec{\omega}_c = -\frac{e}{m}\left\{ \cancel{a\vec{B} + \left(\frac{1}{\gamma^2 - 1} - a\right)\frac{\vec{\beta} \times \vec{E}}{c}} + \boxed{\frac{\eta}{2}\left(\frac{\vec{E}}{c} + \vec{\beta} \times \vec{B}\right)} \right\}$$

ω_a : AMM

ω_η: EDM

Apply $E \sim aBc\beta\gamma^2$

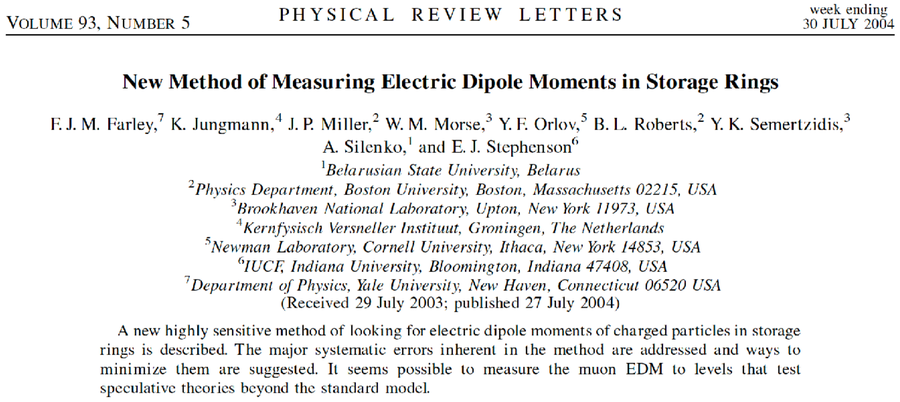

VOLUME 93, NUMBER 5 PHYSICAL REVIEW LETTERS week ending 30 JULY 2004

New Method of Measuring Electric Dipole Moments in Storage Rings

F. J. M. Farley,[7] K. Jungmann,[4] J. P. Miller,[2] W. M. Morse,[3] Y. F. Orlov,[5] B. L. Roberts,[2] Y. K. Semertzidis,[3] A. Silenko,[1] and E. J. Stephenson[6]

[1]*Belarusian State University, Belarus*
[2]*Physics Department, Boston University, Boston, Massachusetts 02215, USA*
[3]*Brookhaven National Laboratory, Upton, New York 11973, USA*
[4]*Kernfysisch Versneller Instituut, Groningen, The Netherlands*
[5]*Newman Laboratory, Cornell University, Ithaca, New York 14853, USA*
[6]*IUCF, Indiana University, Bloomington, Indiana 47408, USA*
[7]*Department of Physics, Yale University, New Haven, Connecticut 06520 USA*
(Received 29 July 2003; published 27 July 2004)

A new highly sensitive method of looking for electric dipole moments of charged particles in storage rings is described. The major systematic errors inherent in the method are addressed and ways to minimize them are suggested. It seems possible to measure the muon EDM to levels that test speculative theories beyond the standard model.

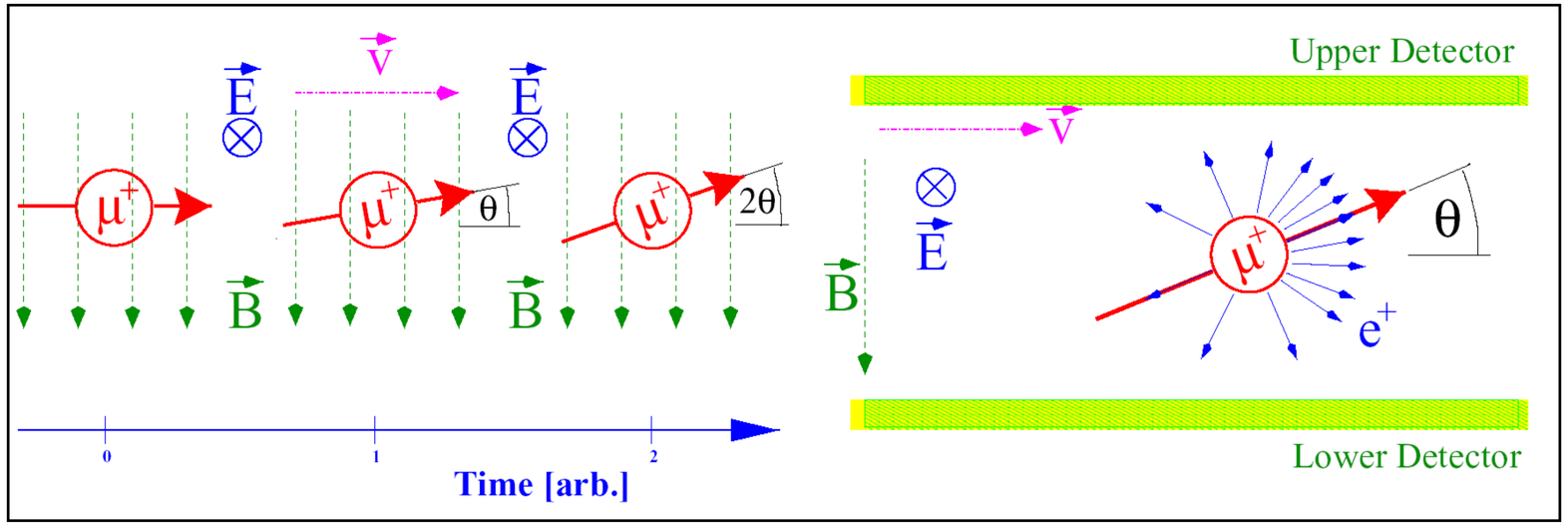

Y.K. Semertzidis, AIP Conference Proceedings 564, 263 (2001)
F.J.M. Farley et al, PRL 93, 052001 (2004)

Lattice storage ring (frozen spin, J-PARC 2003)

Silenko et al.: J-PARC Letter of Intent: Search for the Permanent Muon Electric Dipole Moment at the 10^{-24} e cm Level.

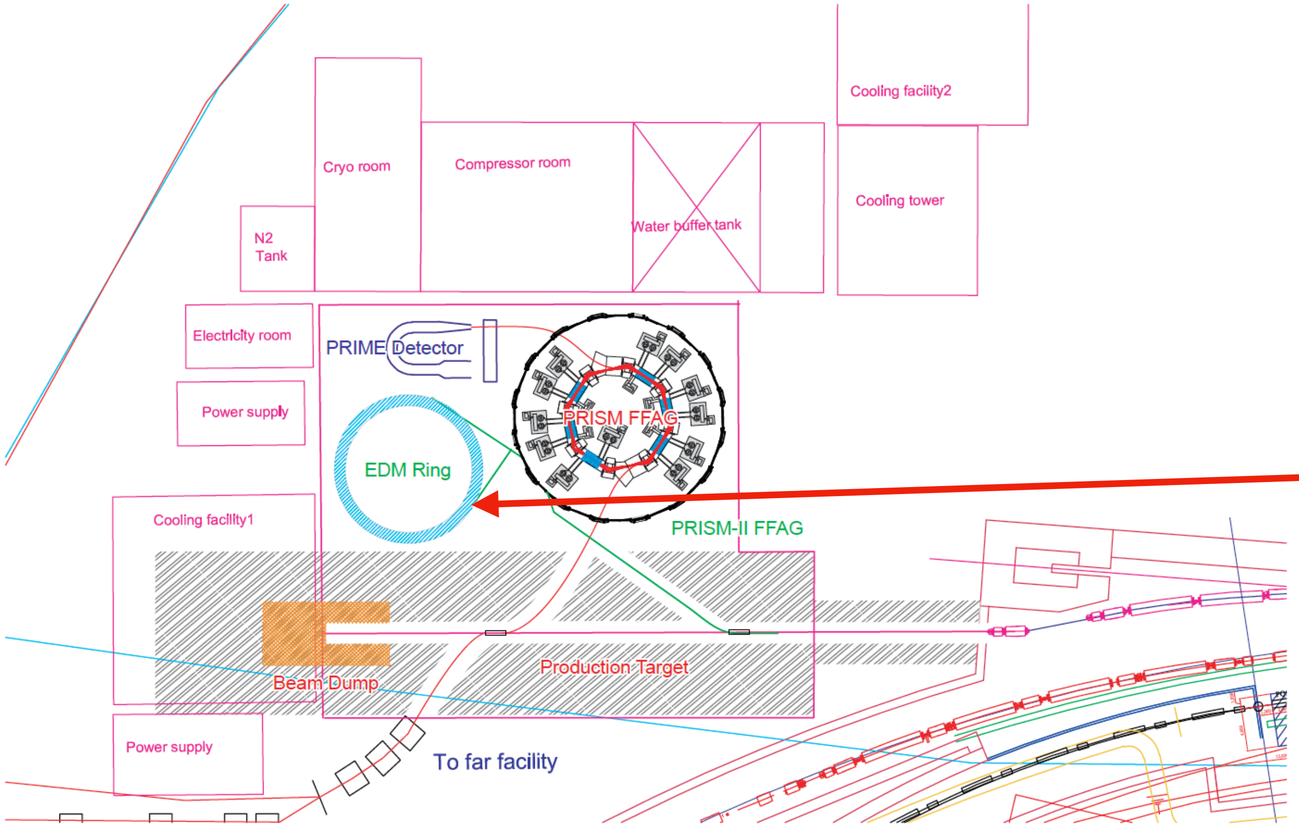

Figure 9.3: A possible layout of the near facility where PRISM and PRISM-II are installed.

$p = 0.5$ GeV/c
$B_z = 0.25$ T
$E_r = 2$ MV/m
$R = 7$ m
$< R >= 11$ m
B+E= 2.6 m
Intervals= 1.7 m

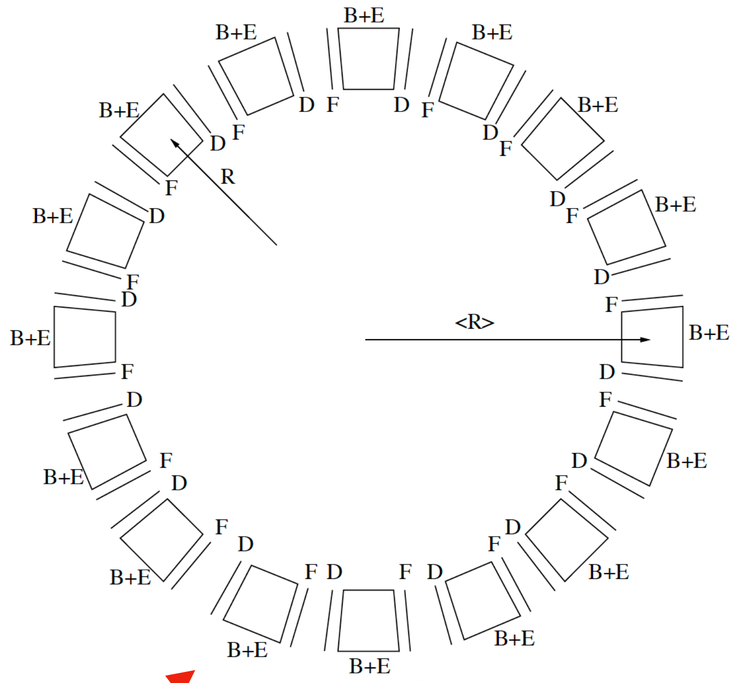

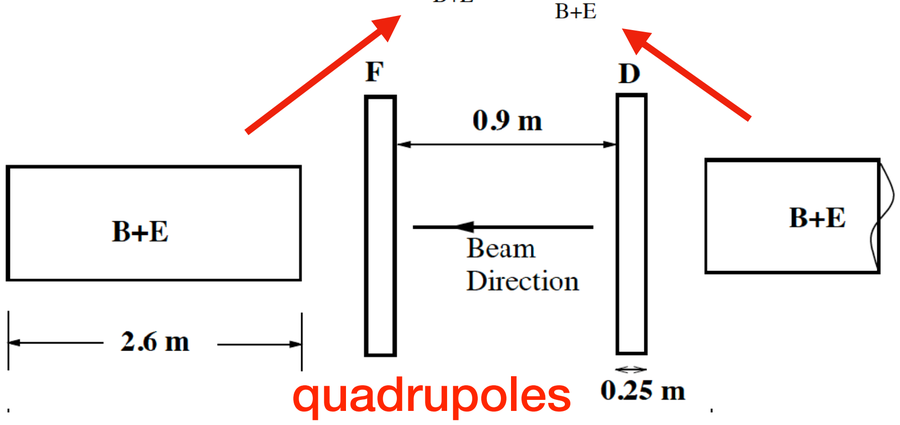

Lattice storage ring (frozen spin, J-PARC 2003)

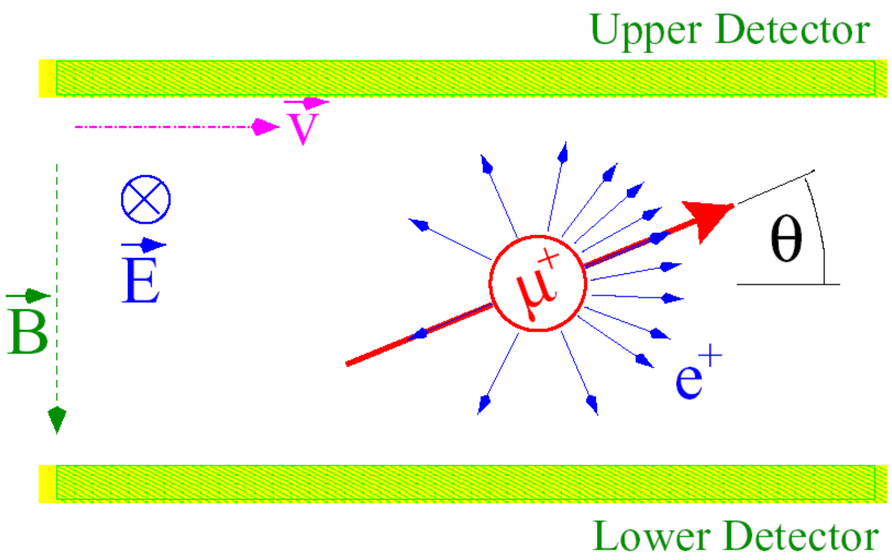

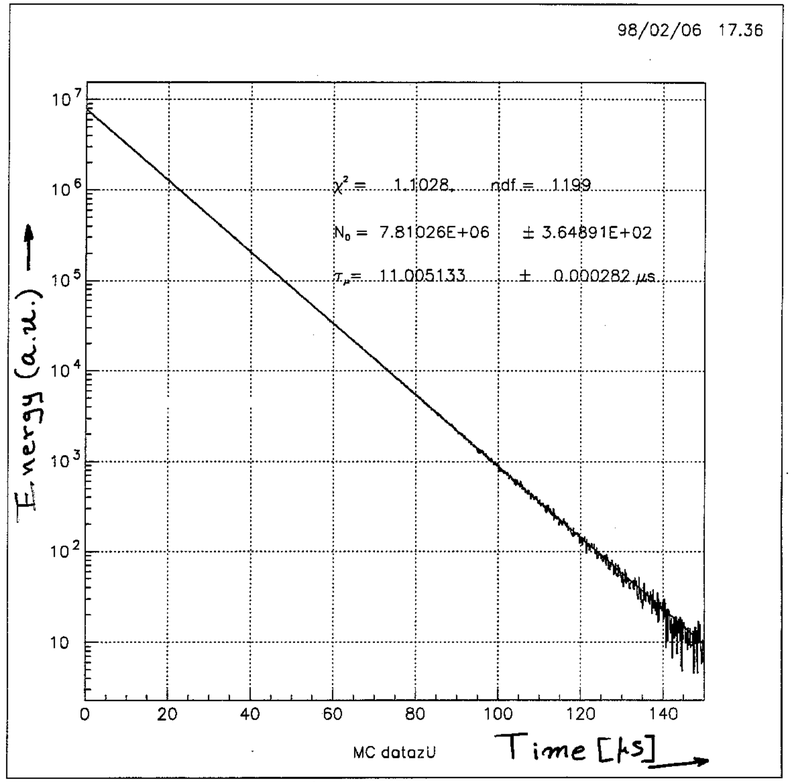

Total count versus time
[pure exponential, no g-2 oscillation]

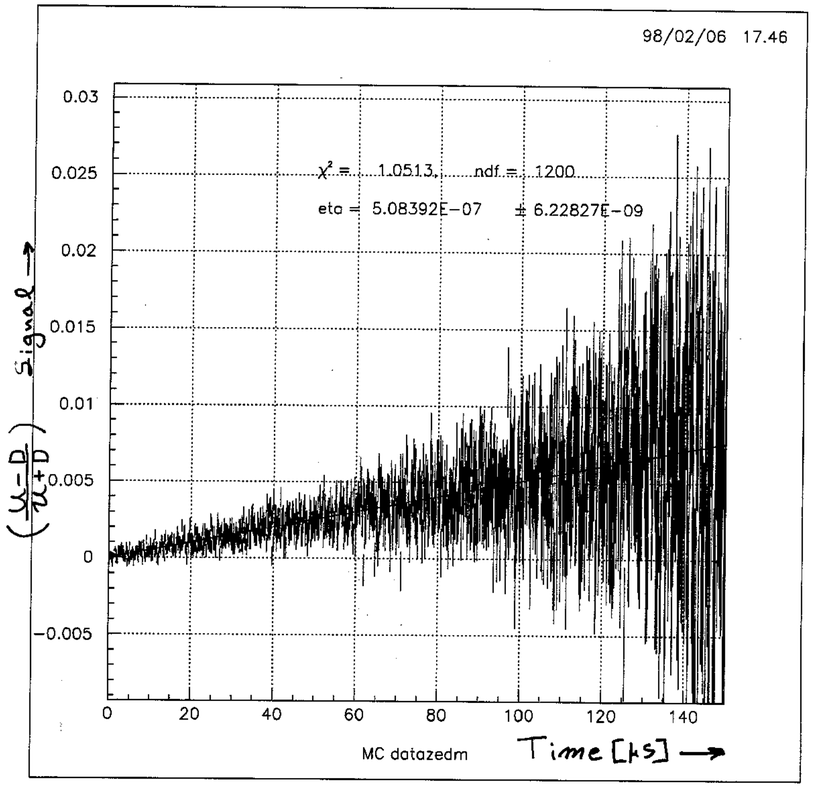

Up-down asymmery versus time
[Slowly builds up]

Y. Semertzidis
EDM Workshop, BNL (2001)

Compact storage ring (frozen spin, PSI 2006)

Muon EDM beam schematics

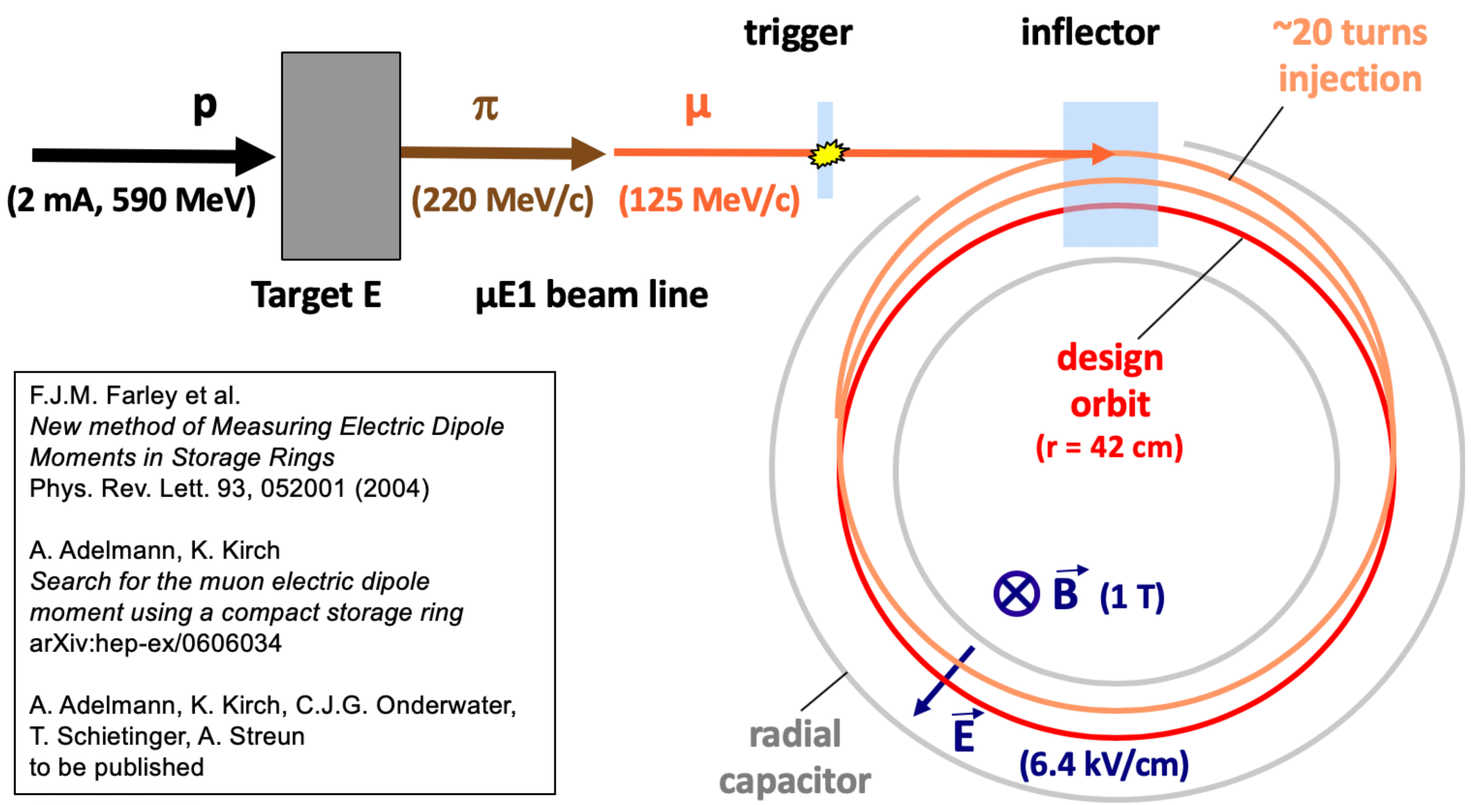

F.J.M. Farley et al.
New method of Measuring Electric Dipole Moments in Storage Rings
Phys. Rev. Lett. 93, 052001 (2004)

A. Adelmann, K. Kirch
Search for the muon electric dipole moment using a compact storage ring
arXiv:hep-ex/0606034

A. Adelmann, K. Kirch, C.J.G. Onderwater, T. Schietinger, A. Streun
to be published

PAUL SCHERRER INSTITUT PSI

Klaus Kirch | Measuring the muon EDM at PSI | Valencia, Jul. 2008

TDLI 李政道研究所 上海交通大学 SHANGHAI JIAO TONG UNIVERSITY

Compact storage ring (frozen spin, PSI 2018)

PAUL SCHERRER INSTITUT PSI

Proposal for a dedicated compact μ-EDM at PSI

P. Schmidt-Wellenburg
Feb 17, 9:50 am

- Weak focusing magnet
- Polarized μ −beam
- Trigger from beam telescope for start of inflector ramp (resonance ½ integer injection*)
- **One** muon at a time ~200kHz rate
- Tracking detector for positrons (resolution ~0.25×0.25mm^2)
- Optional calorimeter

Detector prototype:
Combination of scintillating tiles (timing) and thin MAPS (track,momentum)

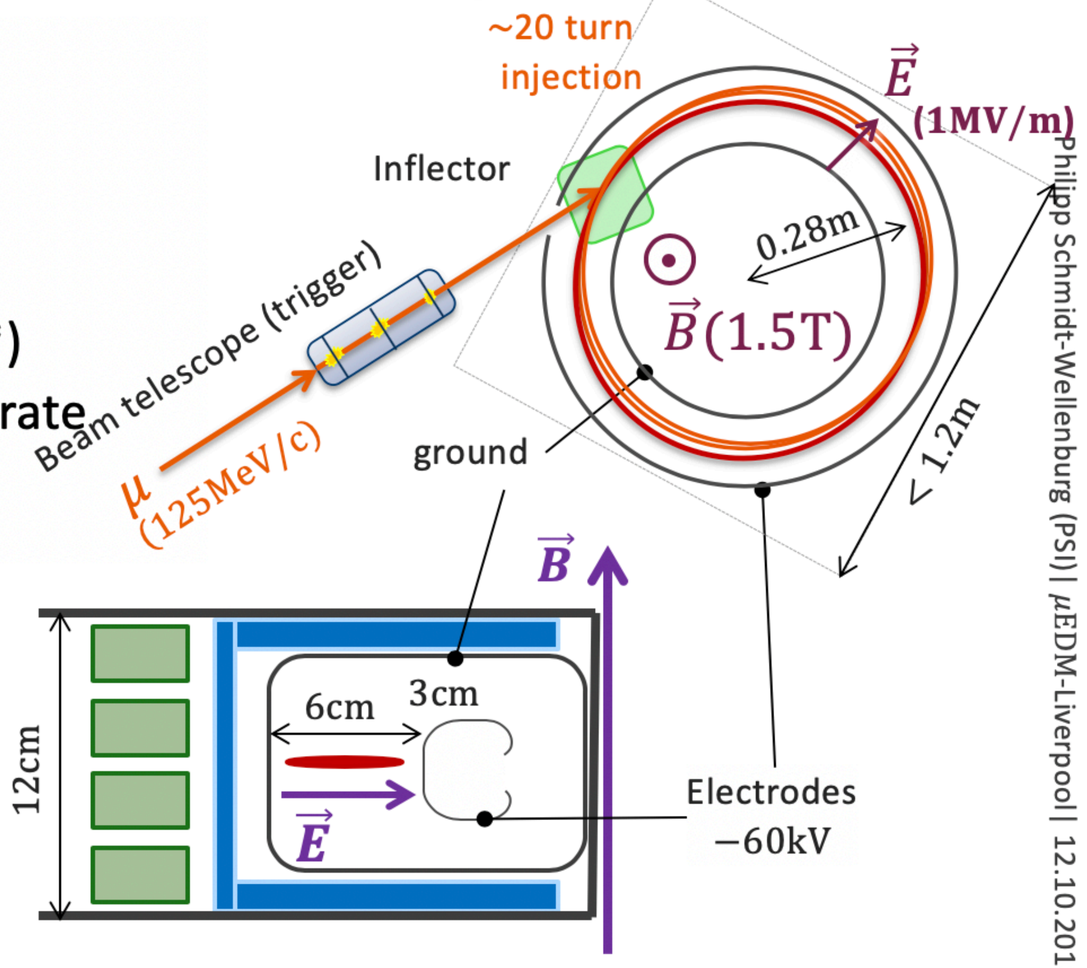

A. Adelmann *et al.* JPG 37(2010)085001
* H. Yamada et al. NIMA467/368(2001)

27

Philipp Schmidt-Wellenburg (PSI)| μEDM-Liverpool| 12.10.2018

TDLI 李政道研究所 上海交通大学 SHANGHAI JIAO TONG UNIVERSITY

Projected sensitivity

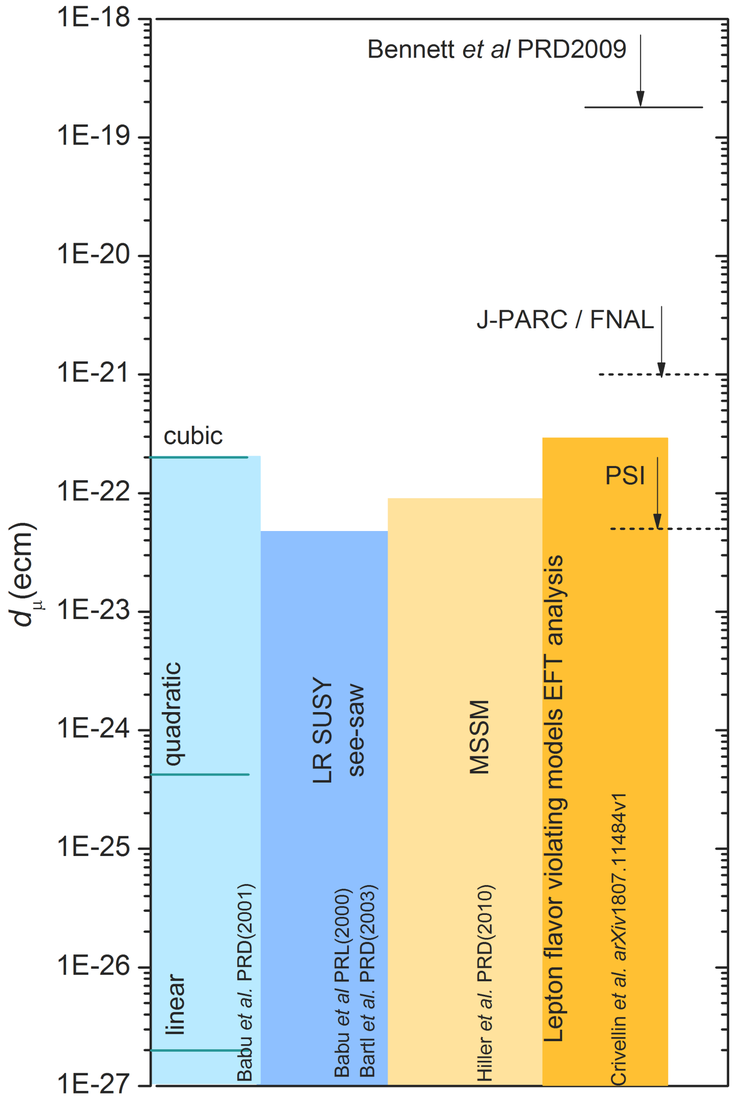

Apply **frozen spin technique**

- PSI μE1: $2\times10^8\mu^+/s$ $\gamma = 1.57$
- Polarization from pion decay: $P = 0.9$
- Mean asymmetry of muon decay: $\alpha = 0.3$
- Compact conventional magnet:

$$B = 1.5\,T \Rightarrow R = 0.28\text{m}, E = 10\text{MV/m}$$

PSI sensitivity (1 year):
$\sigma(d_\mu) < 5\times10^{-23} e\text{cm}$

Plan C

- Detection rate: 200 kHz
- Run time: 2×10^7 s

$\Rightarrow N = 4\times10^{12}$ positrons per year.

P. Schmidt-Wellenburg, muEDM Workshop Liverpool

Summary of muon EDM efforts

Adapted from Chupp et al., Rev. Mod. Phys., Vol. 91, No. 1, 015001-45

Experiment	|p| (GeV/c)	γ	|B| (T)	|E| (kV/cm)	|E'|/γ (MV/cm)	R (m)	Goal (e cm)
J-PARC I-EDM	0.5	5.0	0.25	22	0.76	7.0	10^{-24}
PSI (2006)	0.125	1.57	1.0	6.4	2.3	0.42	7×10^{-23}
Fermilab E989	3.094	29.3	1.45	0	4.3	7.112	10^{-21}
J-PARC E34	0.3	3.0	3.0	0	8.5	0.333	10^{-21}
PSI (2018)	0.125	1.57	1.5	10	3.45	0.28	5×10^{-23}

for g-2 cancellation

experienced E-field in rest frame

Summary

- Muon EDM is one of the least tested area of SM and is sensitive to a rich variety of BSM physics
- Six measurements in the past 60 years and it's current limit is 1.8 x 10^{-19} e cm
- Experiments at FNAL and J-PARC aim to reach O(10^{-21}) e cm
- Frozen-spin technique is the most sensitive approach so far and its realization will open up muon EDM as a probe to new physics
- Frozen-spin technique at PSI could reach
  - PSI-A/B: O(10^{-21}) e cm within a year of data
  - PSI-C: 5 x 10^{-23} e cm within a year of data

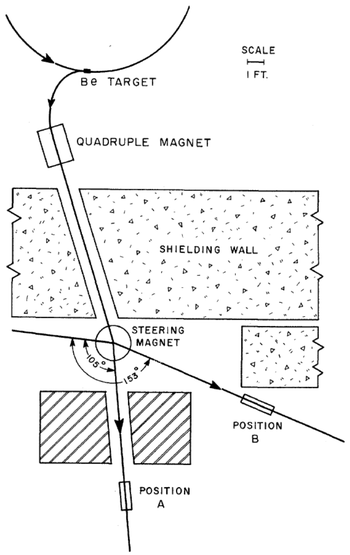
SCALE
1 FT.
Be TARGET
QUADRUPLE MAGNET
SHIELDING WALL
STEERING MAGNET
POSITION B
POSITION A

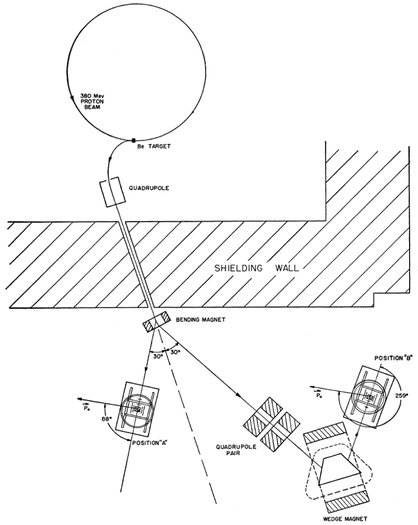
SHIELDING WALL

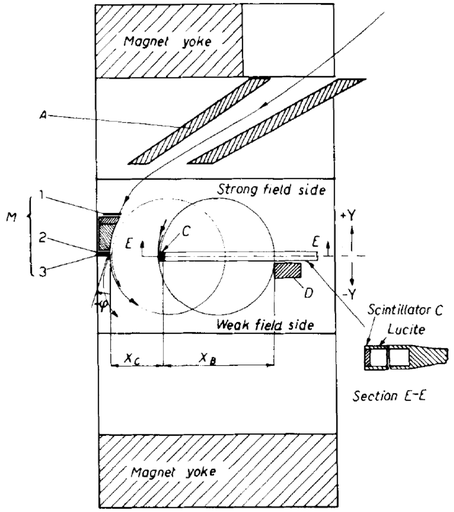
Magnet yoke
Strong field side
Weak field side
Scintillator C
Lucite
Section E-E
Magnet yoke

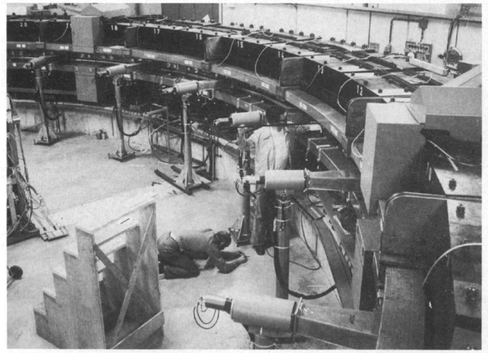

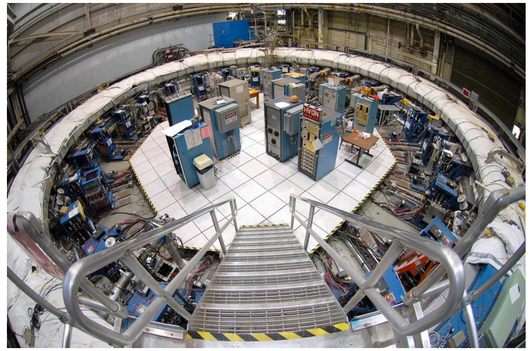

THANK YOU!

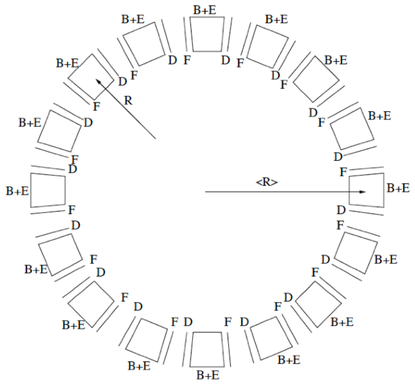

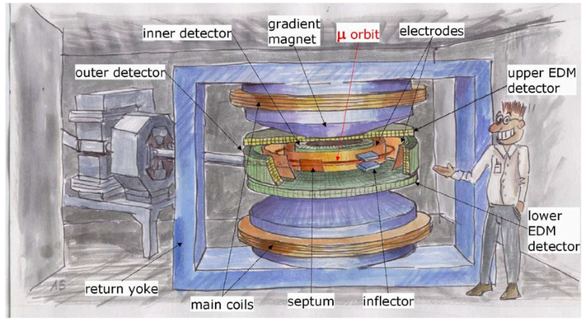
inner detector
gradient magnet
μ orbit
electrodes
outer detector
upper EDM detector
lower EDM detector
return yoke
main coils
septum
inflector

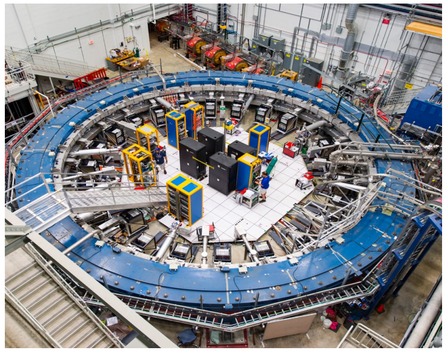

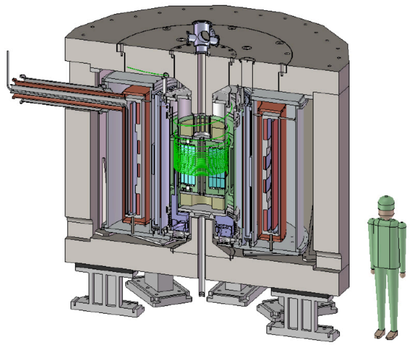

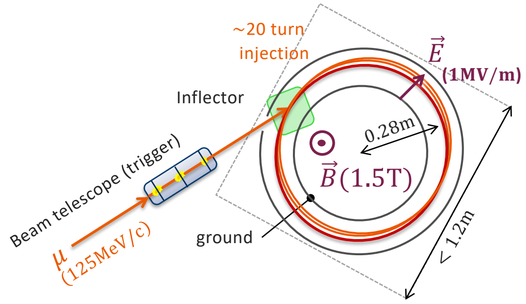
~20 turn injection
Inflector
0.28m
(1MV/m)
Beam telescope (trigger)
ground
<1.2m